BUILDER AND DEVELOPER INFORMATION PACKET

for the use and installation of

CLUSTER BOX UNITS (CBU's)

RICHMOND DISTRICT
1801 BROOK RD
RICHMOND, VA 23232

Project Developers / Builders

During the development stage of a new subdivision, it is the responsibility of the developer and/or builder to pay the costs necessary to bring streets, sidewalks, water, phone, gas, and electric service into a new development. Like utility companies, the Postal Service is a service-based organization. We provide the service of mail delivery; however, we do not provide the mail receptacle.

It is the policy of the USPS that mail delivery to all new developments is centralized delivery, most often using cluster box units (CBU). In the Greensboro District, as in other parts of the country, it is the responsibility of the customer (developers and builders) to provide the necessary mail receptacle equipment.

The authority for this is from the Postal Operations Manual (POM). Section 632, Mail Receptacles, states that,

Appropriate mail receptacles must be provided for the receipt of mail. The type of mail receptacle depends on the mode of delivery in place. Purchase, installation, and maintenance of mail receptacles are the responsibility of the customer.

The POM also advises that appropriate locations for installation be verified and approved by the Postal Service and local government.

To facilitate the most cost-effective delivery of mail into the 21st century, the USPS is committed to assisting both large developers and individual customers with references for the purchase, installation, and maintenance of authorized mail receptacle equipment.

What is a customer's personal identity and security worth?

Is it worth more than the perceived convenience of a walk to the end of the driveway?

The U. S. Postal Service (USPS) in the Greensboro District recognizes that our number one responsibility is to our customers. The consumer that purchases a home is our customer, as is the developer and the builder providing the house. As a federal agency, the mission of the USPS is to accept, transport, protect and deliver the mail for the citizens of the United States of America. We are asking you, the developers and builders, to assist us in protecting our nation's citizens.

Identity thieves target all economic areas, looking for easy targets from which to steal. Unsecured curbside mailboxes are frequently their target of choice. Thieves may be after Social Security checks, income tax refunds, public assistance checks, credit cards, credit card convenience checks, or other valuables. For example, the financial information contained on a bank statement could enable a thief to order blank checks on a checking account. The best defense in preventing this type of crime is in securing the mail. Cluster box units (CBU) are the least expensive and most effective method for combating mail theft.

The USPS recognizes the convenience of a mailbox located at the end of a customer's driveway. However, should a customer be the victim of mail theft, the time, money, aggravation, and efforts needed to rectify the damage can be extremely costly and inconvenient. To insure security of the mail, we strongly suggest the use of centralized, secure cluster box units (CBU's).

Although the USPS is a federal agency, we do not receive government funding. We are a self-supporting entity supported only through stamp sales and services. If mail theft and/or identity theft occur from an unprotected curbside mailbox when a secure CBU could have been in use, the USPS must direct our own resources (postal inspectors) and often those of local law enforcement agencies, as well, to investigate the situation. Unfortunately, resolution and restitution are not always the outcome.

The USPS wants to protect the nation's mail and the identity of its citizens in the safest and most cost efficient way possible. Long after you, the developers and builders, move on to develop your next neighborhood, the USPS remains in the community serving American citizens.

Curbside mailboxes lining the street are an easy target for vandalism and theft.

Over time and without frequent maintenance, curbside receptacles can become an eye sore.

A Sensible Approach for the Use of
CLUSTER BOX UNITS
(CBU)

Long after the builder has sold their home to a buyer, the United States Postal Service (USPS) will remain as a neighborhood fixture providing responsive service to the nation's citizens—our customers. We must consider what is in the best interest of all the citizens we serve—taking into consideration both current and future costs.

Dog Bites – Dogs are very territorial animals. Minimizing trips onto a Postal customer's property reduces the possibility of dog bites.

Community Gathering Area — Cluster box units (CBU) are a location for neighbors to encounter one another and stay acquainted.

Neighborhood Watch — Coupled with their side benefit as a community gathering area, CBU's offer a centralized focal point for added neighborhood watch security.

Unnecessary Trips to the Post Office — Postal regulations dictate that no item can be left at a location that is insecure or does not have a mail receptacle able to accommodate its size, unless the customer has agreed to accept responsibility for its safety. With the use of CBU's, carriers are now able to deliver and secure most items (books, photos, parcels, etc.), rather than leaving notices. Should an individual be away from home (especially, unexpectedly) for several days, their mail does not need to be placed on hold. It can accumulate in a secure receptacle without the need to travel, yet again, to the post office.

Reduces Neighborhood Traffic — CBU's eliminate the need for the carrier to pull in and out between parked cars while serving multiple boxes along busy streets. Most certainly, it reduces the chance that a young child may be encountered and injured as the carrier attends to traffic and avoiding parked vehicles.

Snow Removal — When snow accumulates and restricts access to a curbside box, each homeowner is required to clear a sufficient area to provide drive-up access to the box without the carrier needing to dismount or back his vehicle. With centralized delivery, the homeowners can partner to keep their one CBU clear of snow.

Unsightly Landscaping — Curbside mailboxes can be unsightly elements lining any street (the "picket fence" effect). With proper planning, CBU's offer a beautiful addition to any planned community and blend into the neighborhood in a subtle way.

Reduces Mail Theft — Criminals steal mail specifically looking for checks with the intent of "washing them" and rewriting them for their own use. Theft from curbside boxes takes a matter of just seconds. CBU's offer the security of locked mail receptacles for both incoming and outgoing mail.

Reduces Identity Theft — Identity theft is a very difficult crime to combat. Hundreds of hours and untold frustration is the norm when trying to undo the damage caused by criminals stealing Postal customers' identities.

Cost — Per address, CBU's often cost less than decorative curbside mailboxes. In addition to added security and convenience, CBU's contribute to enhanced property value and may increase your profit margin.

Replacement Rate — Curbside mailboxes have to be replaced more frequently than CBU's. Curbside mailboxes are frequently vandalized or may be struck by automobiles, garbage trucks, etc...

Automobile Parking — Parking is less restricted in areas where CBU's have been installed (one delivery location for a CBU versus up to sixteen individual locations for curbside boxes). Postal customers do not have to be concerned about parked cars blocking their mailboxes and affecting their daily delivery.

Unexpected Absences — In today's busy world, many of us are called away unexpectedly. Mail can then accumulate in a receptacle, leaving the customer exposed to the criminal element. With the use of CBU's, the mail is secured behind a locked door.

Anonymity — CBU's have customer names and addresses unseen and secure behind locked doors, with access only by Postal Service employees.

CBU Locations — CBU's are conveniently located within walking distance of homes. If time is an issue, the customer can easily stop by on their drive through the neighborhood to or from work.

ADA — CBU's are in compliance with American Disabilities Act regulations.

CENTRALIZED DELIVERY/CLUSTER BOX UNITS
ADVANTAGES FOR BUSINESS CUSTOMERS

Like all businesses, the U. S. Postal Service is always looking for new and innovative ways to cut costs in order to operate more efficiently.

Centralized delivery to business customers offers the following advantages:

- The potential for earlier delivery times
- All tenants receive their mail at essentially the same time
- Saves trips to the post office to pick up packages, etc.
- Reduces the need to put mail on “hold” when the business is closed
- Eliminates missed mail delivery in cases when the office is closed or temporarily unmanned
- Permits Saturday delivery to all tenants—open and closed
- Locked boxes offer security and privacy for both incoming and outgoing mail
- There is no unsecured outgoing mail sitting around waiting for the letter carrier’s arrival
- Helps to stabilize postage rates
- Office routines are not interrupted by mail delivery
- Decreases fuel consumption—improving air quality
- Lessens traffic congestion

$ COST COMPARISON $

CLUSTER BOX UNITS (CBU)

VS

CURBSIDE MAILBOXES

Many developers and builders are under the misconception that individual curbside mailboxes are less expensive than a Cluster Box Unit (CBU). In fact, this is not the case; rather, one CBU actually costs less than curbside mailboxes. According to an independent contractor as of April 2007, the average installation costs for CBU and curbside mailboxes are as follows.

16-unit CBU with concrete pad = $1,775.00 ($110.94 per address)
Curbside mailbox = $250.00 per address (cost of the mailbox may vary depending on security features and size)

CLUSTER BOX UNIT -- CBU

CBU customers have a locked secure compartment for the delivery of daily incoming mail, a secure collection point for their outgoing mail, and secure built-in lockers for parcels. In addition, CBU's offer customers anonymity for their name and address. Each of these features greatly reduces the potential for mail and identity theft.
Typical mountings are shown below.

04/06/2006

04/05/2006

CURBSIDE MAILBOXES

A curbside mailbox does not offer the same level of security from mail and identity theft that a CBU does. In addition, curbside mailboxes require frequent maintenance and replacement due to damage or destruction (automobile collisions, children hitting them with baseball bats, weathering issues, etc.). In many cases, these mailboxes are not only unsightly but are also unsecured. With a curbside box, there is no place for the carrier to secure parcels—resulting in a trip to the post office so the customer can pick them up.

ADDITIONAL INFORMATION ON
CLUSTER BOX UNITS (CBU)

- STANDARD UNITS AVAILABLE -

16-Box Unit

Outdoor Parcel Locker

CLUSTER BOX UNITS (CBU)

- UPGRADE POSSIBILITIES -

CBU's come in different styles and colors. Custom pedestals are also available.

CLUSTER BOX UNIT (CBU)
- CONCRETE PAD SPECIFICATIONS -
-ANCHORING METHODS-

The following documents are the only USPS approved specifications for pouring concrete pads for the anchoring of CBU's.

CONCRETE SPECIFICATIONS FOR SINGLE UNIT CONCRETE PAD

CONCRETE SPECIFICATIONS FOR MULTIPLE UNIT CONCRETE PAD

ANCHORING METHODS FOR CENTRALIZED BOX UNITS (CBU)

CBU's must be installed approximately one week prior to customer occupancy.

CBU's must not be installed until the local USPS representative has conducted an on-site visit to ensure compliance with the official specifications. **Contact the local USPS representative to have the pads inspected prior to pouring the concrete.**

CBU's must be installed facing the correct direction. CBU's installed on concrete pads poured behind the sidewalk should face the sidewalk. CBU's installed on concrete pads located in landscape strips between the curb and the sidewalk should face the sidewalk. Do not install CBU facing the curb or street—causing the carrier and the customer to stand in the street to deliver or retrieve mail.

CBU's should not be installed so close to an intersection or traffic lane that they block visibility for approaching traffic or could be struck by a passing motor vehicle.

CBU's should not be located on dead-end streets where there is no safe turnaround for Postal delivery vehicles.

Notify your local USPS representative immediately upon completion of the CBU installation so that we can install the arrow lock and secure the unit.

All CBU compartment keys will be distributed by the builder/developer at the time of move in. The local USPS representative needs to be contacted by the builder/developer for the box address assignments. Each homeowner should receive a copy of the Mode of Delivery Agreement at the time of move in.

Any deviations from the USPS designated location of the CBU must not occur without first receiving authorization from the local USPS representative.

USPS APPROVED SPECIFICATIONS – CONCRETE PAD (SINGLE UNIT)

(All measurements are in inches)

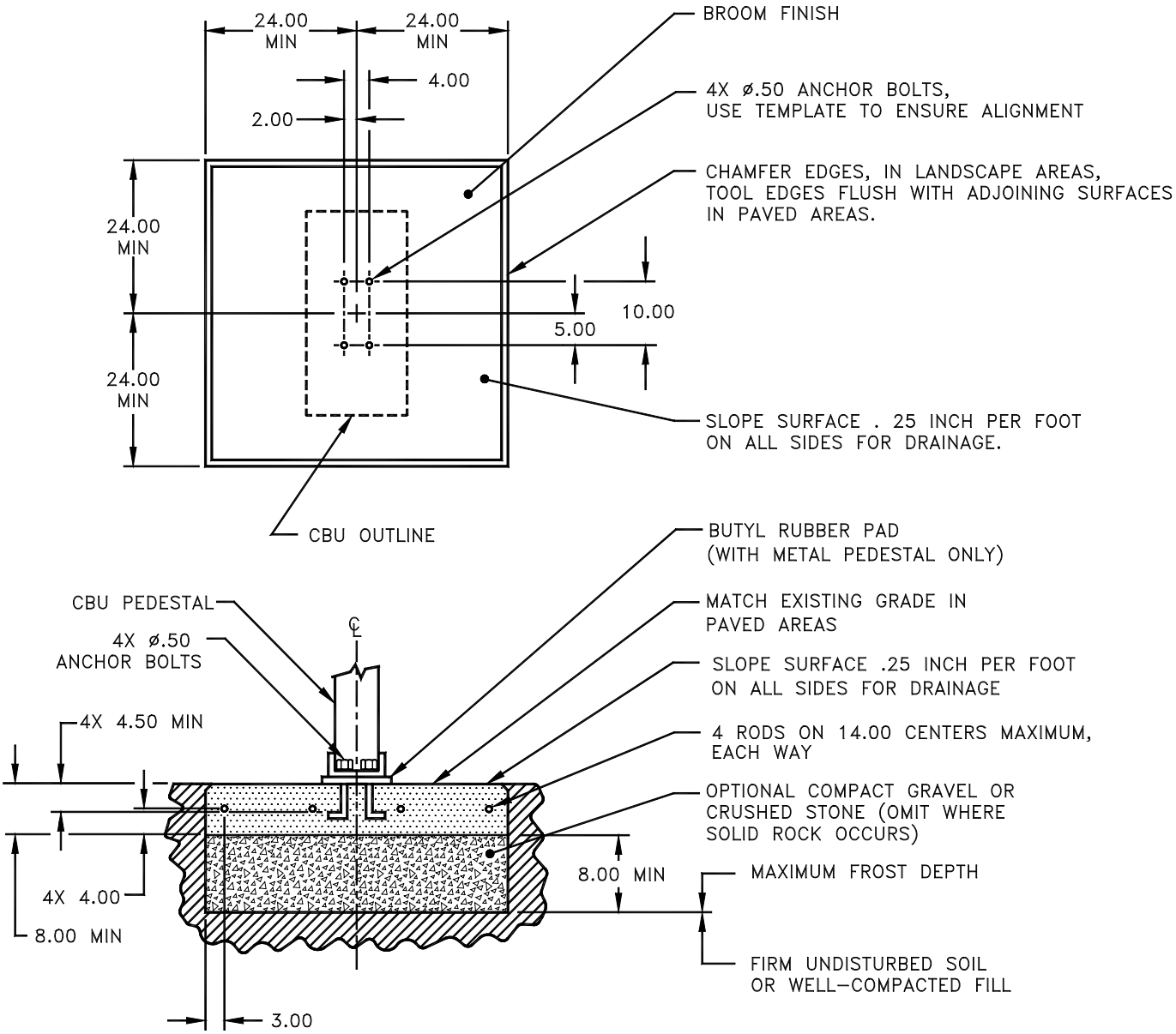

NOTES:

1. CONCRETE SHALL HAVE A COMPRESSIVE STRENGTH OF 3000 PSI @ 28 DAYS, CONTAIN 4% MIN – 6% MAX AIR ENTRAINMENT AND BE PLACED WITH A 3.50 – 4.50 SLUMP IN ACCORDANCE WITH ACI 301.
2. REINFORCING STEEL RODS SHALL CONFORM TO ASTM A615, GRADE 60.
3. ANCHOR BOLTS SHALL CONFORM TO ASTM A193, GRADE B8M, TYPE 316 STAINLESS STEEL.

USPS APPROVED SPECIFICATIONS – CONCRETE PAD (MULTIPLE UNIT)

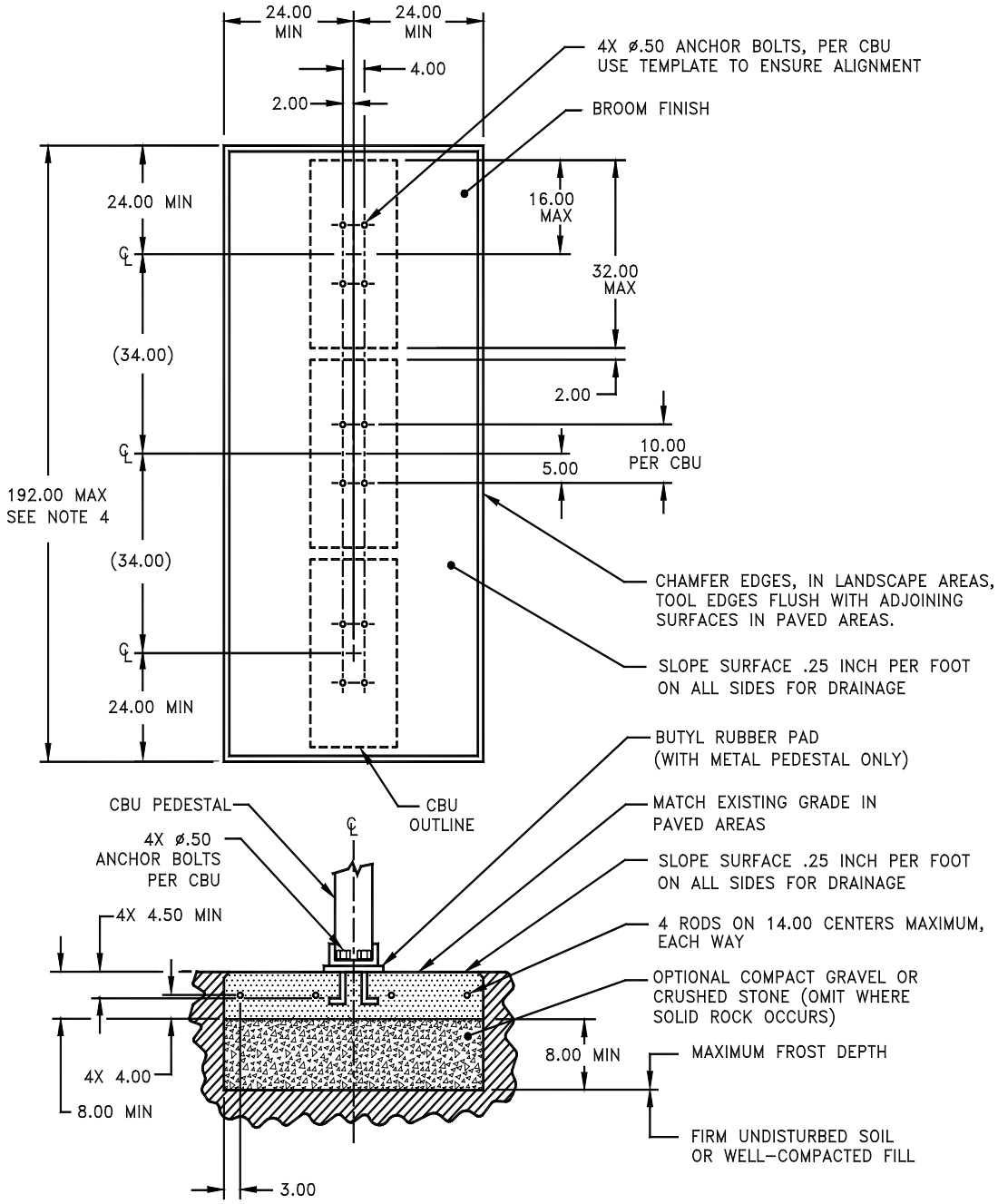

NOTES:

1. CONCRETE SHALL HAVE A COMPRESSIVE STRENGTH OF 3000 PSI @ 28 DAYS, CONTAIN 4% MIN – 6% MAX AIR ENTRAINMENT AND BE PLACED WITH A 3.50 – 4.50 SLUMP IN ACCORDANCE WITH ACI 301.
2. REINFORCING STEEL RODS SHALL CONFORM TO ASTM A615, GRADE 60.
3. ANCHOR BOLTS SHALL CONFORM TO ASTM A193, GRADE B8M, TYPE 316 STAINLESS STEEL.
4. A 3 CBU CONFIGURATION IS DEPICTED. A 2 OR 4 CBU CONFIGURATION MAY BE USED AS LONG AS THEY ARE ARRANGED IN GROUPS SUCH THAT THE OVERALL DIMENSION OF THE CONCRETE BASE DOES NOT EXCEED 192 INCHES.

CLUSTER BOX UNIT (CBU)
-ANCHORING METHODS-

CBU's must be level and mounted firmly in concrete, using one of the following methods.

1. The J-bolt method is the preferred method of installation of CBU's on concrete pads; however, the J-bolt pattern must be accurate with the CBU pedestal plate. When using J-bolts, in order to prevent any damage or accidents that could result from the exposed bolts, consideration should be given as to the time lapse between pouring the concrete and the actual installation. Expansion anchors must be installed in accordance with the manufacturer's instructions.

2. The use of anchor bolts for the installation of CBU's on concrete pads is also acceptable as long as the methods described below are followed.

   a. Hilti Kwik bolt II, 1/2" diameter X 5-1/2" overall length
      Catalog Number: 000-453-696, KB II 12-512
      Stainless Steel Catalog Number: 000-454-744
      Minimum embedment in concrete must be no less than 3-1/2"

   b. ITW Ramset Redhead Trublot, galvanized, 1/2" diameter X 7" overall length

   c. Rawl Stud, 1/2" diameter X 5 1/2" overall length, galvanized.
      Catalog Number: 7324
      Minimum embedment in concrete must be no less than 4"

CLUSTER BOX UNIT (CBU)
-CONCRETE PAD REQUIREMENTS-

- ALL FREE STANDING PADS MUST BE 8" THICK -

1 UNIT	**SINGLE PAD**	**4' X 4'**
2 UNITS	**DOUBLE PAD**	**4' X 7'**
3 UNITS	**TRIPLE PAD**	**4' X 10'**
4 UNITS	**QUAD PAD**	**4' X 13'**

***** WHEN PLACING A PARCEL LOCKER AT ANY CBU LOCATION, <u>INCREASE</u> THE PAD SIZE BY AN ADDITIONAL 4' X 4'*****

This CBU is properly installed—the future sidewalk has been taken into consideration.

The picture above shows a similar install in a finished neighborhood.

These CBU's are properly installed to be <u>level</u> on this steep hill.

REFER TO THE FOLLOWING PHOTOGRAPHS
FOR ILLUSTRATIONS OF BOTH
C☺RRECTLY AND INC☹RRECTLY
INSTALLED CBU'S

INCORRECT - THIS REPRESENTS A SAFETY HAZARD, IS VULNERABLE TO TRAFFIC, AND VIOLATES ADA REQUIREMENTS. THERE SHOULD BE 36 INCHES IN FRONT OF THE CBU FOR WHEELCHAIR ACCESS.

INCORRECT - THE PAD IS TOO SMALL.

CORRECT - IF THIS CBU WAS INSTALLED NEXT TO THE CURB IT WOULD OFTEN BE BLOCKED BY PARKED CARS AND THE CARRIER WOULD NOT BE ABLE TO OPEN IT.

CORRECT – TO REDUCE MAINTENANCE COSTS, INSTALL CBU AWAY FROM THE STREET. CBU'S ARE EASILY DAMAGED WHEN INSTALLED NEXT TO THE STREET**.**

INCORRECT - THE ADA REQUIRES THAT SIDEWALKS REMAIN CLEAR.

CORRECT – NOTE HOW MUCH CONCRETE WAS REQUIRED IN ORDER TO MEET LOCAL CODES.

CORRECT – PLAN AHEAD. THIS PAD WAS ACTUALLY POURED BEFORE THE SIDEWALK WAS PUT IN. THE DIMENSIONS, ELEVATION, AND SLOPE WERE CALCULATED TO MATCH THE FUTURE SIDEWALK.

CORRECT - WHEELCHAIR ACCESSIBLE. SET BACK FROM THE ROADWAY. EASY ACCESS FOR THE CARRIER.

CORRECT

CORRECT - THE RETAINING WALL SHOWS HOW IMPORTANT IT IS TO INSTALL THE CBU AWAY FROM THE STREET**.**

CORRECT - PLACING THE CBU BEHIND THE SIDEWALK INSTEAD OF NEXT TO THE STREET HELPS TO PROTECT THEM FROM VEHICLES WHILE NOT IMPEDING PEDESTRIANS OR WHEELCHAIRS.

INCORRECT - THE PEDESTAL IS EMBEDDED IN THE CONCRETE MAKING THE CBU VERY DIFFICULT TO MAINTAIN.

INCORRECT – LOCATED IN FRONT OF A PUBLIC OFFICE BUILDING - THE CBU SHOULD BE ACCESSIBLE FROM THE SIDEWALK.

INCORRECT - LEANS OVER THE CURB. BLOCKS THE SIDEWALK**.**

INCORRECT - THE CONCRETE PAD ANCHORING THIS CBU IS TOO SMALL. ALSO, THE CBU IS FACING THE STREET. CUSTOMERS SHOULD NOT HAVE TO STEP OFF THE CURB INTO THE STREET TO RETRIEVE THEIR MAIL.

UNITED STATES POSTAL SERVICE™

MODE OF DELIVERY AGREEMENT
RICHMOND DISTRICT

NAME OF PROJECT_____
ADDRESS OF PROJECT _____ **DATE** _____
POST OFFICE/ZIPCODE_____**PROPOSED ROUTE #**_____
This Project is: NEW CONSTRUCTION ___ **RENOVATION** ___ (If renovation, please complete conversion request)
Estimated 1ST Occupancy Date: _____ 10**% Occupancy:** _____ **Completion:** _____
Delivery options will be explained by USPS representative (options shown in gray below).

Type of Project	Deliveries	Equipment-Type / #	EQUIPMENT OPTIONS
Office Bldg (__Floors)	_____	_____	CBU Type I (8 Del)
Shopping Mall	_____	_____	CBU Type II (12 Del)
Strip Mall	_____	_____	CBU Type III (16 Del)
Apts./Condos (__Floors)	_____	_____	CBU Type IV (13 Del)
Townhouses	_____	_____	Curb line 2/post
Single Family Homes	_____	_____	Curb line 4/post
Trailer Park	_____	_____	Wall mount STD 4C
Other (Specify)	_____	_____	

DEVELOPER / CONTRACTOR / OWNER RESPONSIBILITY IS AS FOLLOWS:
Location and installation of all receptacles must be approved by USPS representative.

Concrete pads for CBU's are required to meet USPS specifications.
Concrete pads for CBU's are installed by: Developer __ other __
Equipment purchased by: Developer __ other __
Equipment installed by: Developer __ other __
Equipment owned/maintained by: Developer __ other __
Keys issued to residents by: Developer __ USPS __ other __
Locks changed by: Developer __ USPS __ other __

Residents of single-family homes must be informed of their ongoing responsibility for keys; box maintenance/repair, snow removal, etc.

Note: On multi-tenant delivery and/or rental situations, the building owner/manager is responsible for lock changes. Owner/manager will handle parcels and accountable? Yes __ No __

This notice will serve as an Agreement / Letter of Consent to the Postal Service for the placement of Centralized Delivery Equipment at the agreed upon location(s) indicated on the plat map. By signing below, I acknowledge that the contractor options and responsibilities outlined above for receiving mail delivery service have been discussed with me.

USPS REPRESENTATIVE	PROPERTY DEVELOPER/MGR/OWNER
NAME_____	**NAME**_____
TITLE_____	**TITLE**_____
SIGNATURE_____	**SIGNATURE**_____
TELEPHONE #_____	**TELEPHONE #**_____
DATE_____	**DATE**_____

This agreement is subject to final approval by District Operations Programs. Submit completed agreement and other required attachments to:
Growth Management Coordinator
Operations Programs
1801 Brook Rd
Richmond, VA 23232

USPS APPROVED MANUFACTURERS OF
CLUSTER BOX UNITS (CBUs) & WALL-MOUNTED CENTRALIZED MAIL RECEPTACLES
(USPS-B-1118F, USPS-STD-4B+ AND USPS-STD-4C)

USPS-STD-B-118F

COMPANY	ADDRESS	CITY	STATE	ZIP	PHONE	WEB SITE	DESIGN TYPES
Auth-Florence Manufacturing	5935 Corporate Dr.	Manhattan	KS	66503-9675	800-275-5081	www.auth-florence.com	Types 1,11,111 & IV

USPS -STD-4B+

COMPANY	ADDRESS	CITY	STATE	ZIP	PHONE	WEB SITE	DESIGN TYPES
American Device Manufacturing	5935 Corporate Dr.	Manhattan	KS	66503-9675	800-275-5081	www.auth-florence.com	Horizontal units only
American Eagle	3017 Wheel Lock St	Dallas	TX	75220-2944	214-358-5544	www.americaneaglemailbox.com	Horizontal units only
Auth-Florence Manufacturing	5935 Corporate Dr.	Manhattan	KS	66503-9675	800-275-5081	www.auth-florence.com	Horizontal & Vertical Units
Bommer Industries	PO Box 187	Landrum	SC	29366-0187	800-334-1654	www.bommer.com	Horizontal & Verticle Units
Jensen Industries	1946 E 46th St	Los Angeles	CA	90058-2096	800-235-8351	www.jensen-ind.com	Horizontal & Verticle Units
Salisbury Industries	1010 East 62nd St	Los Angeles	CA	90001-1598	800-323-3003	www.mailboxes.com	Horizontal & Verticle Units
Security Manufacturing	815 S Main St	Grapevine	TX	76051-5535	800-762-6937	www.securitymanufacturing.com	Horizontal & Verticle Units

USPS -STD-4C

COMPANY	ADDRESS	CITY	STATE	ZIP	PHONE	WEB SITE	DESIGN TYPES
Postal Products Unlimited	500 W Oklahoma Ave	Milwaukee	WI	53207-2649	800-229-4500	www.mailproducts.com	Horizontal

Notes: Buildings with permits dated on or after October 5th, 2006 must have USPS-STD-4C receptacles.