SPOTSYLVANIA COUNTY
Department of Utilities

Water and Sewer
Design and Construction
Standards Manual

July 2013

TABLE OF CONTENTS

1. General 1
1.1 Definitions 1
1.2 Intent 2
1.3 Spotsylvania County Water/Sewer Master Plan 2
1.4 Submittals Overview 3
1.4.1 Plan Review and Permitting for Water and Sewer Lines under VDOT maintained Rights-of-Way 3
1.5 Service to Surrounding Areas 4
1.6 Off-Site Facilities 4
1.7 Easements 5
1.8 Contacting Property Owners 5
1.9 Access and Inspection 5
1.10 Contractor Requirements 5
1.11 Record Drawings 6
1.12 Water and Sewer Lines in VDOT Roadways – New Construction 7

2. Design Standards 9
2.1 Construction Drawings 9
2.2 Water System 10
2.2.1 Water Main Location 10
2.2.2 Depth Of Water Mains 11
2.2.3 Water Main Appurtenances 12
2.2.3.1 General 12
2.2.3.2 Hydrants 12
2.2.3.3 Valves 12
2.2.3.4 Tapping Sleeves 13
2.2.3.5 Specialties 13
2.2.3.6 Apparatus and Procedures for Flushing, Draining, and Air Release 13
2.2.4 Fire Department Connections 14
2.2.5 Structural Design 14
2.2.5.1 Special Structures 14
2.2.5.2 Pipe 14
2.2.5.2.1 Ductile Iron Pipe 14
2.2.5.2.2 Poly Vinyl Chloride (PVC) Pipe 14
2.2.5.3 Corrosion 15
2.2.5.5 Thrust Restraint 15
2.2.6 Hydraulic Design for Water Mains 15
2.2.6.1 General 15
2.2.6.2 Demand Criteria 16
2.2.6.3 Fire Flow Calculations 18
2.2.6.4 Dead-End Mains 18
2.2.6.5 Multiple Supply Points 18
2.2.6.6 Meters 18
2.2.6.7 Pressure Reducing Valves 19
2.2.7 Cross-Connection Control Program 19
2.2.8 Water Pumping Stations 19

2.3 Sanitary Sewerage 20
2.3.1 Sanitary Sewer Location 20
2.3.2 Depth Of Sanitary Sewer Lines 23
2.3.3 Sanitary Sewer Manholes 23
2.3.4 Sewer Service Connections 24
2.3.5 Sewer Structural Design 24
2.3.6 Hydraulic Design For Sanitary Sewers 25
2.3.7 Sewage Pump Stations And Force Mains 28
2.3.8 Grease Interceptors 29

3. Construction standards 31
3.1 General Requirements 31
3.1.1 General 31
3.1.2 Laws And Regulations 32
3.1.3 Materials And Workmanship 32
3.1.4 No Deviation By the Contractor From Approved Plans and Specifications 32
3.1.5 Use of Water 33
3.1.6 Clean Up and Restoration 33
3.2 Trenching, Backfilling And Compaction 33
3.2.1 General 33
3.2.1.1 Quality Assurance 33
3.2.1.2 Safety 33
3.2.1.3 Job Conditions 33
3.2.2.1 Soil Materials 34
3.2.3 Execution 35
3.2.3.1 Inspection 35
3.2.3.2 Excavation 35
3.2.3.3 Hardpan Excavation 37
3.2.3.4 Rock Excavation 37
3.2.3.5 Blasting 38
3.2.3.6 Backfill For Trenches 38
3.2.3.7 Backfill For Structures 40
3.2.3.8 Compaction 40
3.2.3.8.1 Compaction and Inspection for Public Utilities Under Pavements in VDOT maintained rights-of-way – New Construction 41
3.2.3.8.2 Compaction and Inspection – Testing and Reporting Methods 41
3.2.3.9 Construction In Public Streets, Roads And Alleys 43
3.2.3.10 Tracing Wire System for all Water and Sewer Mains 45
3.2.3.11 Marking Tape for all Water and Sewer mains 46
3.2.3.12 Disposal Of Waste Materials 46
3.3 Sanitary Sewer Systems 47
3.3.1 General 47
3.3.1.1 Requirements Of Regulatory Agencies 47
3.3.2 Products 47
3.3.2.1 Sewer Pipe and Fittings 47
3.3.2.2 Sanitary Sewer Manholes: 48
3.3.2.3 Sewage Air/Vacuum Valves 49
3.3.2.4 Sewage Combination Air Release Valves 50

3.3.2.5 Sewage Air Release Valves 51
3.3.2.6 Sewage Plug Valves 51
3.3.3 Execution 53
3.3.3.1 Installation Of Sanitary Sewer Systems 53
3.3.3.2 Testing Of New Sanitary Sewer System (Non-Pressure) 58
3.3.3.3 Video Inspection of Sanitary Sewer Lines 62
3.3.3.4 Pressure Testing Requirements for Sewer Force Mains 64
3.3.3.5 Tracing Wire and Locating Tape for Sewer Force Mains 64
3.3.3.6 Clean-Up 64
3.4 Water Distribution System 66
3.4.1 General 66
3.4.1.1 Requirements Of Regulatory Agencies 66
3.4.2 Products 66
3.4.2.1 General 66
3.4.2.2 Water Pipe 66
3.4.2.3 Gate Valves and Tapping Valves 67
3.4.2.4 Butterfly Valves (16” - 72”) 69
3.4.2.5 Tapping Sleeves 70
3.4.2.5.1 Stainless Steel Tapping Sleeves 70
3.4.2.5.2 Ductile Iron Tapping Sleeves 70
3.4.2.6 Double Check Assembly 71
3.4.2.7 Fire Hydrants 71
3.4.2.8 Check Valves 73
3.4.2.9 Water Service Assembly for 5/8” Water Meters 73
3.4.2.10 Water Service Setter for 1”, 1-1/2” and 2” Water Meters 74
3.4.2.11 Valve Boxes 76
3.4.2.12 Air Release Valves 76
3.4.2.13 Valve Manholes 77
3.4.2.14 Joint Restraint Systems 77
3.4.2.15 Cast Couplings 77
3.4.2.16 Casing Spacers 78
3.4.3 Execution 78
3.4.3.1 Installation Of New Water Systems 78
3.4.3.2 Pressure Testing Of Water Main 85
3.4.3.3 Disinfection 86
3.4.3.4 Supplemental Procedures For Disinfecting, Testing, And Flushing 89
3.4.3.5 Testing Of Double Check Assembly 90
3.4.3.6 Abandonment Of Water Service 91
3.4.3.7 Abandonment Of Water Mains 91
3.4.3.8 Clean-Up 91

4. approved materials and manufacturers list 92

5. APPENDICES 107
5.1 Appendix A – Water Meter Sizing 107
5.2 Appendix B – Utilities Site Plan Checklist 109
5.3 Appendix C – Spotsylvania County Standard Water and Sewer Notes 111
5.4 Appendix D – Utilities Internal Project Tracking 113

5.5 Appendix E – Reimbursement Agreement 115
5.6 Appendix F – Corrosion Control Program 121
5.7 Appendix G – Standard Details 126

1. GENERAL

1.1 Definitions

A. APPLICANT: The entity seeking approval of the Department of Utilities for a project affecting the water and/or sewer system of the County.

B. CONSTRUCTION DOCUMENTS: Construction Documents shall mean the approved plans, specifications, permits, shop drawings, or references required for the completion of the work

C. CONTRACTOR: The Applicant or the Applicants' agent who has been contracted to perform the work.

D. COUNTY: The County of Spotsylvania acting through the Director of Utilities or his agents.

E. DEQ: The Virginia Department of Environmental Quality.

F. EASEMENT, PERMANENT, PUBLIC: An area of land through which the County or the Commonwealth is granted the perpetual right to install, maintain, and/or replace public facilities, and typically to limit the activities of others, as recorded on a deed-of-easement and shown on a plat. The granting owner retains ownership of the property subject to the terms and conditions of the easement. Easements are classified into two broad categories: 1.) off-site, where the likelihood of human activity would be minimal, and 2.) maintained, such as residential lot.

G. ENGINEER: The Professional Engineer, or engineering firm who has been designated by the Applicant as Engineer in relation to the project, whether acting directly or through properly authorized agents, inspectors or representatives.

H. FINAL ACCEPTANCE: or Letter of Final Acceptance, a written document from the Country to the Applicant, Contractor, and Engineer stipulating that the Final Inspection has been performed, the project has been deemed complete and is ready to be adopted into the County's system. The Letter of Final Acceptance shall specify the date the Warranty Period begins.

I. FINAL INSPECTION: The last inspection made by the County Inspector of the project to confirm that all work and subsequent clean up and restoration has been completed in accordance with the County's specifications, the requirements of the approved plans, and to the satisfaction of the Inspector.

J. INSPECTOR: The agent of the Director of Utilities authorized to inspect all materials and equipment to be utilized and work done.

K. MASTER UTILITY PLAN: Drawings and associated documents describing the utility system proposed by the Applicant in support of a subdivision plan, site plan or

multiple site plans. The master utility plan includes, but is not limited to, plan views, hydraulic profiles and elevations, hydraulic calculations and definitions of easements to the level of detail required for a Site Plan.

L. POTW : Publicly Owned Treatment Works

M. RIGHT-OF-WAY, PUBLIC: An area of land dedicated to the County or the Commonwealth for provision of public facilities including transportation, as shown on a recorded plat. The County or Commonwealth becomes the effective owner of the property, and retains all rights and responsibilities associated with ownership.

N. SITE PLAN: Drawings and associated documents describing the development of land as required under Section 23-4.11 of the Code of Spotsylvania County.

O. SUBCONTRACTOR: Any individual, firm or corporation having a direct contract with the Contractor for the performance of any part of the work.

P. SUBDIVISION PLAN: Drawings and associated documents describing the dividing or re-dividing of a parcel of land as required under Section 20 of the Code of Spotsylvania County.

Q. VDH: The Virginia Department of Health

R. VDOT: The Virginia Department of Transportation

S. WARRANTY PERIOD: A one-year guarantee of equipment, materials, and labor by the Applicant that begins on the date set forth in the Letter of Final Acceptance

1.2 Intent

This Design Standards Manual has been prepared to establish the guidelines and technical requirements for water and sanitary sewer infrastructure construction projects in Spotsylvania County, Virginia. The Director of Utilities may allow for variations to these standards. Any variation from these standards shall be highlighted and shown on the construction plans. The approval of the construction plan shall not be considered approval of a variation without the Director of Utilities written authorization. The designs shall be in accordance with this Manual, the latest edition of the Virginia Waterworks Regulations and Sewage Collection and Treatment Regulations (SCAT), and any other local, State, or Federal agencies having jurisdiction including the requirements of the Code of Spotsylvania County as they pertain to water and sanitary sewerage systems. Where conflicts exist among these documents, the more stringent requirements, as solely determined by the Department of Utilities, shall apply. Nothing herein shall be deemed to waive requirements of any existing law and/or regulation.

1.3 Spotsylvania County Water/Sewer Master Plan

The current edition of the Spotsylvania County Water/Sewer Master Plan identifies regional sanitary sewerage and water pumping stations. Public pumping stations not previously identified in the Water/Sewer Master Plan are strongly discouraged and will only be considered for

construction when service cannot be otherwise reasonably provided, as determined by the Department of Utilities.

Low Pressure and/or Vacuum sanitary sewerage systems may be considered on a case-by-case basis for the rehabilitation of failing existing public or private sewer and septic systems.

1.4 Submittals Overview

Prior to the approval of any portion of a subdivision or site plan, the Applicant shall submit an overall master utility plan of proposed water and/or wastewater systems for the entire development for review and approval by the Department of Utilities. At least one set of construction drawings must accompany the master utility plan for review. For complex projects and projects which may require special considerations, the Applicant should arrange a meeting with the Department of Utilities to discuss the approach to be taken to supply water and sanitary sewer service. All water and sanitary sewer systems must be located and sized properly to serve the entire service areas as determined by the current Spotsylvania County Water/Sewer Master Plan.

Spotsylvania County has a water/sewer local review program approved by VDH and DEQ for the review and approval of water and sewer mains up to 12-inches in diameter. All projects with larger mains and all other types of facilities, pumping stations, storage facilities, or others require the Applicant to obtain specific approval from the VDH and DEQ prior to construction.

Several local, state, and federal agencies exercise jurisdiction over development, including utilities, in Spotsylvania County. The Applicant is responsible for determining the requirements of and restrictions imposed by all interested agencies, and for addressing each issue to the satisfaction of the interested agency. These agencies may include but are not limited to:

State Agencies: VDH, DEQ, VDOT, Department of Conservation and Natural Resources

Federal Agencies: US Army Corps of Engineers (USCOE), US Environmental Protection Agency (EPA)

Local Agencies: Spotsylvania County Utilities, Planning, Fire, Rescue and Emergency Services, Zoning, and Code Compliance Departments

In addition, multiple utility owners provide various services within Spotsylvania County. The Applicant is responsible for determining the requirements of and restrictions imposed by all interested utilities, and for addressing each issue to the satisfaction of the utility. These utilities may include but are not limited to: Dominion Virginia Power, Rappahannock Electrical Cooperative, Verizon, Comcast, Commonwealth Gas, and Virginia Natural Gas.

1.4.1 Plan Review and Permitting for Water and Sewer Lines under VDOT maintained Rights-of-Way

For new projects involving water and/or sanitary sewers under pavements on subdivision roads to be incorporated into the VDOT secondary system , a review will be performed by VDOT's District Office for compliance with VDOT's standards and specifications. Once

approvals are obtained, a VDOT Land Use permit will be required for all work within the right-of-way to be maintained by VDOT.

1.5 Service to Surrounding Areas

The Applicant will be required to design and construct water and sewer facilities, properly sized and at appropriate locations, to permit future extensions to be made at or beyond the limits of the Applicant's construction. The sewer system must be sized and designed to allow gravity service to all of the area naturally draining toward the system. Water systems must be sized and designed for future extensions. Utility easements must be provided to allow adjoining properties to connect to the water and sewer systems. Incremental improvements related solely to service for future extensions will be considered incidental to the proposed construction and shall be constructed solely at the Applicant's expense unless either:

A. Nominal pipe diameter is increased by more than two nominal sizes (nominal sizes are 6", 8", 10", 12", 14", 16", 18", 20", 24", 30", 36", 42", 48", 54", 60") from either pipe designed solely for the Applicant's need or pipe designed to County minimum diameter, whichever is greater. In this case, the Applicant must pay the costs of up to two nominal size increases, and the County may provide reimbursement for reasonable additional incremental costs above the two nominal size increases.

B. Average sewer pipe depth is increased by more than 2-feet for more than 10% of the total pipe length, not including laterals, involved in the project. In this case, the Applicant must pay costs for increases of depth not exceeding 2-feet, and the County may provide reimbursement for reasonable costs created by increases of depth exceeding two feet.

C. Where proposed facilities indicated on the current Spotsylvania County Water/Sewer Master Plan are deemed necessary or advisable by the Department of Utilities in order to provide service for a combination of the proposed development and future extensions, the financial responsibility, location, and details of such construction shall be determined in conference by the Applicant and the County. Both the Applicant and the County Administrator shall acknowledge agreements so established in writing. Each proposed item of construction may be a separate matter for discussion and agreement. All constructed utility facilities shall become the property of the County after successful testing and acceptance by the County.

1.6 Off-Site Facilities

Where the Department of Utilities deems that offsite improvements of water or sewer facilities are necessary or advisable in order to provide service to the Applicant, the financial responsibility, location, and details of such construction shall be determined in conference by the Applicant, the County Administrator, and the Director of Utilities and shall be subject to approval by the Board of Supervisors. Both the Applicant and the County Administrator shall acknowledge any and all agreements so established in writing. Each such proposed item of off-site construction may be a separate matter for discussion and agreement.

1.7 Easements

The water and sewer utilities that will become the property of the County and do not lie wholly within a public right-of-way shall require permanent easements that will be dedicated to the County. The easements must be shown on the construction drawings and labeled as to the classification, type, and dimensions. The Department of Utilities shall determine the proper classification during the plan review.

The utility easements will be centered on the utility and will be a minimum of twenty (20) feet wide for utilities where the depth to the invert is less than fifteen (15) feet and a minimum of thirty (30) feet wide in all other cases. Combined water and sewer easements will be a minimum of thirty-five (35) feet wide. Increased easement widths may be required at the sole discretion of the Department of Utilities.

Access (ingress/egress) easements may be additionally required at the sole discretion of the Director of Utilities where needed to properly maintain utilities. The access easements will be a minimum of twenty (20) feet wide.

Fences, buildings trees, shrubs, landscaping, or other obstacles that may be inconsistent with the purpose and use of the easement (such as potentially damaging public facilities or rendering the easement inaccessible to equipment) are prohibited. Such obstructions placed on a utility easement may be removed and disposed of by the Department of Utilities at the sole risk and expense of the property owner.

1.8 Contacting Property Owners

Prior to performing any survey and design work on private property, the applicant shall notify the affected landowners and obtain the landowners' permission for all work. The notification shall be made in the form of a letter to be sent to the property owners. Copies of these letters shall be provided to the Department of Utilities if requested.

1.9 Access and Inspection

During the progress of the work, the Applicant shall provide the Director of Utilities and other duly authorized representatives of the County access to the locations of construction for the purposes of establishing to their satisfaction that the projects are being constructed to County requirements and in accordance with approved plans and specifications.

1.10 Contractor Requirements

Only those contractors with the proper Class licensure, based upon the value of the job, shall perform utility work. The contractors shall have a heavy highway endorsement.

No utility work may begin until the Department of Code Compliance has issued the proper land disturbance permits. All plan review and inspection fees must be paid and a performance bond or surety, which may be a cash bond or letter of credit, must be posted before a permit will be issued.

A permit must be obtained from VDOT for all work performed in the VDOT right-of-way.

The Contractor shall obtain all required licenses and permits, pay all charges and expenses connected with the work, and be held responsible for all damages to persons or property, which may occur in connection with the Contractor's work.

1.11 Record Drawings

The Applicant shall submit a complete set of as-built record drawings upon completion of the project. These record drawings shall be sealed by the Engineer and shall include changes made to locations of buried and exposed piping (existing as well as proposed), equipment changes, substitutions, and all variations from the approved construction plans and documents. Final acceptance will not be issued until said documents and digital files have been submitted to and approved by the County.

The Contractor shall keep daily as-built plans at the construction site. These daily as-builts shall include size, horizontal and vertical location of all existing utilities uncovered during the course of the work. This shall include telephone cables and conduits, TV and fiberoptic cables, electrical cables and conduits, gas lines, water lines, sewer force mains, sanitary sewers, and storm sewers. The contractor's as-builts shall be available to the Inspector at all times during the life of the project and shall be provided to the responsible Engineer for preparation of the record drawings at the completion of the project.

Final record drawings shall be created using field survey and sealed by the responsible Engineer. At the completion of the project the County will be provided a paper copy of the as-built record drawings, one set of matching digital coordinately correct drawings in a CAD format acceptable to the Department of Utilities, and one set of .pdf files of the record drawings.

Record drawing information shall include, but not be limited to:

1. Water Line Construction:

    a. Scale location of the installed waterline and all valves, bends, reducers, plugs and caps, restrained joints, encasements, and any other fittings or special construction.
    b. Material, class, and specification and sizes of all pipes.
    c. Location and size of all water main taps made, including plugs and corporations stops used for testing.
    d. Two (2) physical ties from structures within 200 feet, to all valves, fittings and structures installed shall be shown. Allowable structure ties shall include buildings, curbs (dimension must be perpendicular to curb), utility poles, fire hydrants and manholes.
    e. Location of meter barrels and sewer laterals from the property corners. Sewer laterals distance shall also be measured from the downstream manhole and lateral elevation given at the property line as well as the elevation of the upstream manhole rim. The distance from the sewer line to the property line cleanout shall be noted.
    f. GPS coordinates in two places on each as-built sheet .

g. Land Record numbers and limits of easements for all public utility easements on the sheet.

2. Sewer Line Construction:

   a. Scale location and elevations of manhole inverts shall be determined by field survey following construction.
   b. Scale indication of lengths, grades, and direction of lines between manholes and numerical notations of the lengths and grades as determines following construction.
   c. Location of all encasements or special construction.
   d. Scale location of all service laterals by measurement from the manhole immediately downgrade.
   e. Scale Location of all cleanouts shall be determined by field survey following construction. Distance from the sewer main and side property line, if feasible shall be noted.
   f. Material, class, and specification and sizes of all pipes.
   g. GPS coordinates in two places on each as-built sheet.
   h. Land Record numbers and limits of easements for all public utility easements on the sheet.

3. Wastewater and water pumping stations and all other comparable construction and building structures:

   a. As-built plans and specifications shall accurately indicate all approved deviations from or changes in locations or type of equipment installed and material used.
   b. Accurate listings of the names of the manufacturers of all operating equipment installed, together with model or style numbers, ratings, capacities and other pertinent information shall be provided as part of the record plans on the project.
   c. At least two (2) complete sets of operation and maintenance manuals for all operating equipment and all certificates of inspections, warranties, and guarantees of equipment, materials and installation thereof, required by the project specifications which are approved by the Director, shall be provided as part of the record drawings for the project.

1.12 Water and Sewer Lines in VDOT Roadways – New Construction

Parallel installations of water and sanitary sewer lines may be allowed to be in the roadway pavement section subject to review and approval by VDOT. All projects must be new subdivision roads to be constructed in accordance with the VDOT Road Design Manual Appendix B(1) and will be considered on a case by case basis. The Owner/Developer/Engineer must submit, in writing, a request to VDOT stating their justification and reasoning for approval of parallel installation of water and sanitary lines to be located in the roadway pavement section. All applicable provisions of all VDOT manuals are to be adhered to.

Specific zoning designations that will have the ability to locate water and sewer lines in the roadway are: Mixed Use (MU), Planned Development Housing (PDH), Planned

Development Commercial (PDC), Residential-1 Cluster (R-1C), Residential-2 Cluster (R-2C), Residential-8 (R-8), Residential-12 (R-12), Residential Manufactured Home Park (R-MHP), Village Commercial (VC), and Village Residential (VR) or any development planned with lots less than 10,000 square feet in area.

The parallel installation of water and sewer utilities under the pavement in rights-of-way to be maintained by VDOT shall be in accordance with chapter three, Geotechnical Engineering, of the VDOT Materials Division Manual of Instruction, VDOT Road Design Manual Appendix B(1), The VDOT Land Development Inspection Documentation Best Practices Manual, Spotsylvania County Department of Utilities Water and Sewer Design and Construction Standards Manual, and all related VDOT standards, specifications, and regulations, whichever specification is most stringent and most pertinent to the method of construction.

The following sections of this Manual detail requirements that need to be met for VDOT approval:

Sec. 2.2.1 Water Line Location
Sec. 2.3.1 Sanitary Sewer Location
Sec 3.2.3.6 Backfill for Trenches
Sec 3.2.3.8.1 Compaction and Inspection for Public Utilities under Pavement in VDOT maintained right-of way – New Construction
Sec 3.2.3.9 Construction in Public Street, Roads, and Alleys
Sec. 3.3.3.3 Closed Circuit Video Inspection

2. DESIGN STANDARDS

2.1 Construction Drawings

The construction drawings shall contain the information necessary to construct the utilities shown. The information shall be presented in a clear and legible manner, at a horizontal scale of 1”=40’ or larger for plan views on curb and gutter sections or 1”=50’on ditch section projects, and a vertical scale of 1”=5’ or larger for profile views. Graphic scales shall be provided for each view.

The vertical datum for surveys shall be noted on the plans. The vertical datum shall be Mean Sea Level (USC & GS Datum). The horizontal datum shall be the Virginia Coordinate System (VCS) of 1983. The bearings shall be referenced to VCS 83 grid north. The foot definition used for conversion of the coordinates is the “US Survey Foot” or 1 foot = 1200/3937 meters.

The construction drawings shall show a survey base line with at least two control points per sheet, and at least two vertical benchmarks, temporary or permanent, per sheet, all to first order accuracy at the mapping scale and to the nearest 1/100 feet.

The proposed utilities will be labeled in plan and profile as to size and material. Each fitting, service line, valve, manhole, vault, and/or connection to existing utilities or other feature shall be labeled and stationed to the nearest foot in plan and/or profile. Drop manholes must be clearly labeled. For sewer systems, pipe slopes shall be shown to the nearest 1/100 of a percent and finished floor elevations, manhole rims, manhole inverts, and pipe inverts to the nearest 1/100 feet. The plan and profile views for utilities will be shown on the same drawing sheet unless otherwise specifically approved by the County.

Each lot shall show the elevation of the rim of the upstream manhole of the sewer section to which the sewer lateral for the lot is connected. This elevation will be used to determine the need for backwater devices based on the flood rim elevation of potential plumbing fixtures.

The plans shall identify and show the vertical and horizontal location of all existing and proposed facilities or appurtenances that may be encountered, in conflict, or require protection during installation, repair, or future extension of the proposed water and/or sewer facilities. Such facilities, whether buried or above ground, may include but not be limited to facilities for water, sanitary sewerage, storm water, drainage, telecommunications, CATV, data, electrical, traffic control, gas, or steam. Where there is a possibility of conflicts with existing facilities, the Department of Utilities reserves the right to require that the Engineer secure accurate information on the horizontal and vertical location of such utilities through subsurface exploration and to include such information on the plans. The plans shall show the existing and the proposed rights-of-way and easements for those areas in which water and sanitary sewerage facilities are proposed.

A Key Sheet shall be provided for all multiple page plan sets. The Key Sheet, at a minimum, shall show:

a. Sheet numbers of the plan and profile along the streets,

b. Lot numbers and property lines,

c. Sewer lines, laterals, and manholes,

d. Water mains including Tees, valves, and fire hydrants, and

e. A complete Sanitary Sewer Data Table, which may be shown on the main Key Sheet or in part on each plan and profile sheet.

The Engineer shall submit a copy of the Utilities checklist, included with the County's Site Plan Application, with a certification that the plans reflect all applicable items on the checklist. The Utilities checklist is not all-inclusive, merely representative of items that are routinely improperly submitted or otherwise selected by the Department of Utilities for your convenience. The use of the checklist does not relieve the Applicant from complete compliance with all of the standards and requirements shown in this Manual, whether or not reflected on the checklist.

2.2 Water System

2.2.1 Water Main Location

Water mains to be installed in streets that will become VDOT maintained right-of-way must be done so in accordance with the requirements of the most current versions of all pertinent VDOT standards, specifications, and regulations.

Where approved by VDOT, on a case by case basis, construction of water lines parallel to the right of way may be allowed to be located under the pavement. This approval shall, in part, be based upon the density of the development and the practicality of placing water lines outside of the pavement area. The waterline shall be constructed in the centerline of the outermost lane. Waterlines shall not be constructed in the vehicle wheel path unless approved by VDOT. All measurements are from the centerline of the pipe. All water service taps and lines shall be constructed to the edge of the right-of-way during initial construction to eliminate the need for open cuts to make service connections. Water meter barrels shall be placed one foot behind the right of way line.

Water mains may also be installed in the easements parallel to the existing right-of-way. Where the water mains are to be installed in roads expected to be widened in the future, they shall be located in the easements unless the future road cross section is known and the location of water main and appurtenances are designed to avoid future relocation. The water mains and their appurtenances shall be designed so that they will not need to be lowered and so that excessive fill depths will not be created when the road is widened or driveways are installed.

The water mains installed in roads not planned for expansion will be installed in the existing right-of-way if possible.

The location of water mains along major roadways (roads four lanes or greater in width) shall be determined on a case-by-case basis. The water mains shall be located on both sides of the major roadways and provided with appropriate interconnection points between the parallel water mains

so that service connections need not cross the major road.

The Engineer shall consider the location of existing and proposed sanitary sewer, storm drainage systems, and all other underground structures and utilities that could affect the location and types of material for the water main. The selected location should avoid conflicts and facilitate future maintenance. Water mains shall be located at elevations above sanitary and storm sewers when possible. Water mains shall not be located under retaining walls.

Where there is a possibility of major conflicts with existing utilities and/or other structures, the Department of Utilities may require that the Engineer obtain accurate information on the horizontal and vertical location of such utilities through subsurface exploration and reflect this information on the plans.

The water mains to be constructed on piers or attached to bridges or any other non-buried structure will be permitted only when it can be demonstrated to the Director of Utilities' satisfaction that no other practical alternative exists. The Engineer shall submit a design for the piers, pier foundation, attachments, hangers, and pipe that will demonstrate the structural integrity of the proposed system. Aboveground water pipes shall be adequately supported, protected from damage by freezing, and accessible for repair or replacement.

All water lines crossings of railroads, major roadways, and other major structures shall be contained in a casing pipe. The design of the railroad crossings shall comply with the requirements of American Railway Engineering Association Specifications, "Part 5 – Pipelines" (latest revision). The Applicant shall be responsible for obtaining the required railway permits and/or agreements for the County, paying any fees, and posting any required construction bonds and occupation fees for the railway crossing prior to beginning construction on any part of the project. A copy of the permit and/or agreement shall be provided to the Department of Utilities prior to a Construction Permit being issued for the project.

2.2.2 Depth Of Water Mains

For water and service lines up to 12 inches in diameter, the depth from the finished grade to the top of the pipe must be greater than or equal to 42 inches and not to exceed 72 inches. For water lines 12 inches and greater in diameter, the depth from finished grade to the top of the pipe must be greater than or equal to 48 inches and not to exceed 72 inches.

All water mains shall be constructed to a depth that will provide protection against freezing and thawing and against loads imposed during roadway construction or repair and ensure adequate cover over valves and other appurtenances. The new installations of water mains adjacent to roadways shall have a minimum of 42" of cover from the existing/proposed edge of pavement. Greater depths shall be required where street grades will possibly be lowered in the future. Clearance shall be provided for enlargement of undersized drainage structures.

Any earthwork, which takes place over an existing water main, shall be required to maintain the water main at a maximum depth of 72 inches below the finished grade and a minimum depth of 42" below the finished grade. Where the depth of a water main will exceed 72 inches, the water main shall be raised; where the depth of cover is less than 42", the water main shall be lowered.

2.2.3 Water Main Appurtenances

2.2.3.1 General

All valve boxes, air relief valves, fire hydrants, service lines, vaults, and other appurtenances shall be constructed in accordance with Spotsylvania County standards and details.

2.2.3.2 Hydrants

Unless otherwise stipulated by the Spotsylvania County Fire Marshall, the Director of Utilities, or "Article 2 – Fire Regulations" of the Spotsylvania County Design Standards Manual, hydrants shall be located at street corners, in mid-block at lot side-lines, at low and high points along water mains, and at the ends of water mains. The maximum spacing between hydrants shall be 800 feet along water mains. The Department of Utilities and the Spotsylvania County Fire Marshall shall approve the exact location of fire hydrants.

Easements must be provided where there is less than 5 feet of clearance from a hydrant to the property line. The edge of the easement is to be 10' from the fire hydrant.

Access to the fire hydrants must be unobstructed by guardrails, landscaping, or other obstacles. No obstructions will be erected within 4 feet of fire hydrants or within 10 feet of fire department connections.

The 5 1/4 inch "steamer" nozzle shall face the street or other travel way as approved by the Fire Marshall.

2.2.3.3 Valves

Valves shall be located at a maximum of 800 foot intervals and along pipe runs on the larger diameter pipe and at all changes in pipe diameter. Valves shall also be provided at all pipeline intersections so as to provide shut off for repairs of limited sections without interruption of service to large areas and to facilitate testing. A minimum of two valves shall be provided at tees, except hydrant tees, which require a valve on the hydrant branch only and except tapping sleeves, which must be specifically approved and require a valve on the tapped branch only, and three valves at crosses. Additional valves may be required by the Department of Utilities.

To facilitate repair, the distance along the pipe between valves and fittings shall be at least 12-inches plus twice the laying length of a compact solid sleeve of matching diameter, but no greater than ten feet. All valves are to be restrained to fittings by approved methods.

Where any main enters private property (for example, to provide for private fire service) a valve shall be installed at the property line. This valve shall not be considered as one of the two required at the Tee.

At the terminus of a water main that is proposed to be later extended a valve shall be installed. The valve shall be properly restrained and shall have at least one full joint of pipe installed beyond the end-of-line valve. A hydrant may be installed at the end of the line, however the hydrant branch valve shall not serve as the end-of line valve.

2.2.3.4 Tapping Sleeves

Tapping sleeves are encouraged for new-branched connections to existing water mains to prevent system shutdowns.

2.2.3.5 Specialties

Water mains shall be provided with air release valves, hydrants, and water quality-monitoring stations at suitable locations to allow testing, disinfecting, and flushing of the main. Standard fire hydrants shall be installed on all dead-end mains for flushing purposes.

2.2.3.6 Apparatus and Procedures for Flushing, Draining, and Air Release

A fire hydrant shall be provided at each low point (lowest local elevation of the water main, including consideration of hydrant spacing minimums) on mains 12-inches and larger to facilitate flushing and draining. On lines smaller than 12", fire hydrants shall be located at low points whenever possible, to facilitate flushing and draining. Air release valves shall be placed at high points (highest local elevation of the water main, including consideration of the location of valves and hydrants) to minimize air buildup in the main and to allow air in and/or out during draining and refilling. Hydrants may be placed in lieu of air release valves at the discretion of the Department of Utilities.

The Engineer shall use the following guidelines with regard to location of flush points and air release valves during the design of water main extensions.

Access to flush points by the Department of Utilities personnel shall be provided.

Design must include appropriate erosion control, construction phase flushing procedures and environmental impact consideration for both construction and long-term operation of the facility. Certain controls (such as rip rap in the discharge area or others) may be needed at the time water main is installed.

The following are to be considered the minimum requirements for the construction phase flushing:

a. Flushing operations require advance approval of the Department of Utilities, which may specify day, date, and time of day for flushing.

b. Flush points are to be located near local drainage facilities (natural or man-made).

c. The number of flushing points shall be minimized and strategically placed to allow for proper flushing to be performed.

d. Chlorine residual exceeding 3 parts per million shall be neutralized before discharge. Contractors must provide equipment for neutralizing chlorinated water flushed from mains to a maximum of 3 parts per million during construction prior to discharging the water.

2.2.4 Fire Department Connections

"Article 2 – Fire Control Regulations" of the Spotsylvania County Design Standards Manual, governs Fire Department connections.

2.2.5 Structural Design

2.2.5.1 Special Structures

Structures shall be built as shown in the standard details. Structures other than those shown in the standard details shall be considered special structures. Special structures require specific approval by the Department of Utilities and must be specifically identified by the Engineer at the time of plan submittal.

2.2.5.2 Pipe

2.2.5.2.1 Ductile Iron Pipe

Pipe shall be ductile iron meeting requirements of AWWA C151. Pipe shall be asphaltic coated outside and cement lined with double thickness and seal coated in accordance with AWWA C104. Unless otherwise indicated, the design thickness of the pipe shall be not less than the minimum shown in AWWA C150. Pipe shall be furnished in lengths of 18 to 20 feet and shall include all jointing materials. Installation shall be in accordance with AWWA C600.

All water mains either 12 inches (12") and greater in diameter or under paved areas shall be constructed of Ductile Iron Pipe unless otherwise approved by the Director.

Unwrapped ductile iron pipe shall not be used for a project unless a soil investigation in accordance with AWWA C105 is performed. Interpretation of results shall be made by the Director. If the soil investigation demonstrates that the soils would be corrosive to ductile iron pipe, the pipe shall be wrapped with polyethylene. Polyethylene encasement shall be in accordance with ASTM D1248 and AWWA C105 and shall be 8 mil thick.

2.2.5.2.2 Poly Vinyl Chloride (PVC) Pipe

Polyvinyl Chloride pipe (PVC) four inches (6") through ten inches (10") shall be minimum Pressure Class 200 (SDR 14) PVC water with "push-on" type joints meeting all requirements of AWWA C900. Outside diameter of the PVC pipe shall be the same as the outside diameter of cast iron water pipe meeting ANSI Specifications A 21.6. Installation of water mains and services shall be in accordance with AWWA C605. PVC pipe two-inches (2") and three-inches (3") shall be ASTM D2241 SDR 21 (200 psi) certified for the transport of potable water. Joints shall be "push-on" type joints complying with ASTM D3139.

PVC shall only be used for water mains less than twelve inches (12") in diameter

2.2.5.3 Corrosion

Under certain conditions, including but not limited to aggressive soils and electrolysis, where there is a high probability of external corrosion to the pipe, the procedures set forth in the Corrosion Control Program, found in Appendix D of this Standards Manual, shall be implemented and followed.

Soil replacement in the area of the trench or trench improvement shall not be considered as an alternative method of corrosion control.

2.2.5.5 Thrust Restraint

Mechanical joint restraint for ductile iron pipe shall be incorporated into the design of the follower gland. The restraining mechanism shall consist of individually actuated wedges that increase their resistance to pull-out as pressure or external forces increase. The device shall be capable of full mechanical joint deflection during assembly and the flexibility of the joint shall be maintained after burial.

Thrust protection is to be shown on plans in the standard details profile. The profile shall include pipe joints, fittings, and appurtenances. When profile views are not available restraint lengths shall be included on the plan view or table. Thrust blocks are prohibited except where pipe restraint cannot be achieved using restrained pipe joints, fittings, and appurtenances

The restraint system shall be compatible with PVC when connecting to existing PVC pipe.

2.2.6 Hydraulic Design for Water Mains

2.2.6.1 General

Design Basis: Water distribution systems shall be designed to provide adequate flow and pressure for domestic demands, irrigation demands and fire flows based on sound hydraulic analysis. The Waterworks Regulations stipulate a minimum 20-psi system pressure policy to insure proper supply. This minimum pressure shall be taken into consideration and the design shall be based upon:

A. Maximum flow velocity at peak hour (excluding fire flow) of 5 feet per second.

B. Hazen-Williams “C” Value of 120 for new pipe.

C. Pipe sizing based on velocity requirements or maintaining system residual pressure of 20 psi during maximum day demand plus required fire flow, whichever results in larger pipe.

D. The required fire flow shall be calculated as set forth in “Article 2 – Fire Regulations” of the Spotsylvania County Design Standards Manual. The Engineer shall contact the Department of Utilities to schedule a fire flow test. The Department of Utilities must be present during any test but will not provide equipment or manpower for a test. Spotsylvania County is not responsible for the results of any test or for any design made on the basis of any test. Spotsylvania County does not imply or warrant that conditions occurring during a test are necessarily representative of the system’s ability to provide water under all or even normal conditions.

E. The available system pressure and potentially available flows at the connection points of the proposed water system to the County's existing system may be provided by the Department of Utilities on receipt of basic information from the Applicant for the proposed development, including but not limited to items below.

   a. Number, size, and type of connections in the development;

   b. Required Fire Flow, including any requirements for sprinkler or other specific fire protection systems;

   c. Average day demand, maximum day demand, and peak hour demand; and

   d. Operating hours for any large-demand customers (greater than 5,000 gallons per day).

   e. Numbers, sizes, and demands of irrigation systems within the proposed development.

   The pressures and flow capabilities provided by the County are not guaranteed values but are representative values under specific conditions selected by the Department of Utilities for the evaluation of water system extensions at the time of the evaluation. Actual pressure and flow capability may be subject to significant change over time and in actual usage. The Engineer must evaluate the pressure and flow data, which the County may have provided to determine if that data is correct.

Hydraulic Report: The Engineer shall submit the information and calculations on fire flows and domestic water demands for the project. The Engineer shall provide a detailed analysis for evaluation by the Department of Utilities to ensure that the specifications of this section have been followed. The Engineer shall provide this information with all water plans submitted for review.

2.2.6.2 Demand Criteria

Until site-specific information has been established the following criteria shall be used in estimating average daily demands at the discretion of the Department of Utilities:

Land Use	**Gallons per Day per Acre**	**Equivalent Persons per Acre**
Residential – Less than 2 dwellings/acre	500	5
Residential – Less than 4 dwellings/acre	1,200	12
Residential- Less than 8 dwellings/acre	2,500	25
Residential-Low	500	5
Residential-Medium	1,000	10

Residential-High	2,500	25
Agricultural	1,000	10
Commercial-Retail	2,000	20
Commercial-Office	1,500	15
Industrial-Light	2,000	20
Industrial-Medium	3,500	35
Industrial-Heavy	3,500	35

Where site-specific determinations can be made, average day demands shall be determined by using the following design information:

Facility to be Served	**Design Units**	**Flow gpd**
Dwellings	per person	100
Elementary School	per person	10
High School	per person	16
Motel and Hotels	per room	130
Trailer Courts	per trailer	300
Restaurants	per seat	50
Service Stations	per vehicle serviced	10
Factories	per person per 8 hour shift	25
Shopping Centers	per 1,000 sq. ft.	250
Hospitals	per bed	300
Nursing Homes	per bed	200
Homes for the Aged	per bed	100
Medical Center	per 1,000 sq. ft.	500
Laundromats	per washing machine	500
Theaters	per seat	5
Bowling Alleys	per lane	75
Office Buildings	per 1,000 sq. ft.	200

Flows for other uses may be determined by using demands approved by the Department of Utilities.

Maximum daily demands and peak hourly demands for new development will be governed by specific determinations if operating factors are known (for example, in the case of production

facilities). If specific determinations cannot be made, the following formula from VDH shall be used for residential demand of less than 1000 dwellings:

$$Q = 11.4 * N^{0.544}$$

Where Q = maximum day demand in gallons per minute

N = number of dwellings (less than 1,000)

In other cases, the following demand multipliers may be used at the discretion of the Department of Utilities.

Maximum Daily Demand	=	1.8 times Average Daily Demand
Peak Hourly Demand	=	2.7 times Average Daily Demand

2.2.6.3 Fire Flow Calculations

The method of calculating the fire flow requirements shall be at the discretion of the Applicant. The fire flow requirements shall be provided by the Applicant to the Department of Utilities with all non-residential site plans. This data is for informational purposes only. By approving a site plan, the County does not warrant that its system will necessarily provide any calculated flow. It is the Applicant's responsibility to complete any testing and come to its own conclusions about the ability and reliability of the County's system to provide adequate fire flow. See "Article 2 Fire Protection", Spotsylvania County Design Standards Manual.

2.2.6.4 Dead-End Mains

Dead-end water mains shall be eliminated by looping whenever feasible. Dead-end water mains may be six (6) inches in diameter if there is no more than one (1) fire hydrant at the end for flushing and a water demand were design flow and residual pressures can be maintained. Approved joint restraint systems are to be used as required to provide adequate restraint.

Where valves are placed for future water main extensions, valves are to be restrained to the fitting and a minimum of one joint of pipe, restrained to the valve, shall be installed past the valve except where calculations or local conditions indicate more pipe is required to provide adequate restraint. The live side of the valve shall be restrained to the appropriate length for the size, pressure, and local conditions of the main.

2.2.6.5 Multiple Supply Points

A minimum of two connections to the existing water transmission or distribution main shall be provided for subdivisions containing more than 50 lots.

2.2.6.6 Meters

The Applicant is required to provide service lines and meters to all lots serviceable from the proposed construction. Services and meters shall be sized and locations designed in accordance with the worksheet presented in Appendix A of this Design Manual. Minimum service size shall

be 3/4" pipe with 5/8" meter. Services shall be shown and detailed on the plans for both residential and commercial developments. County standard meter sizing forms (in Appendix A) shall be submitted with all non-residential site plans. If an irrigation meter is used, it will connect separately to the primary supply main so that the domestic use meter does not meter the flow.

2.2.6.7 Pressure Reducing Valves

When the service connection system pressure will be greater than 80 psi, pressure-reducing valves to be operated and maintained by each customer shall be installed on the customer's service line or interior plumbing in accordance with the plumbing code. The pressure reducing valve shall be owned, operated, and maintained by the owner of the property and shall be inspected by the County's Building Inspector.

2.2.7 Cross-Connection Control Program

Spotsylvania County conducts a cross-connection control program. In accordance with this program and the requirements of the Virginia Waterworks Regulations, no direct connection of any type to the potable water system to any sewer, storm or drain system is permitted. In addition, no connection to the potable water system to any unapproved source, for example, a private well, is permitted.

Backflow prevention devices are required where, in the opinion of the Department of Utilities, the customer's use of water may present a potential for backflow or contamination, or where otherwise defined under the Uniform Statewide Building Code, the Spotsylvania Cross Connection and Backflow Prevention Program, or the Waterworks Regulations.

2.2.8 Water Pumping Stations

Water pumping stations are special projects and specific project standards and plans will be prepared by the Engineer and submitted to the County for review and approval. Water pumping stations will only be allowed when specifically approved by the Department of Utilities.

The design requirements for a water pump station shall be determined through discussions with the Department of Utilities prior to initiating the design. After the design criteria have been determined, the Engineer shall prepare a preliminary engineering report, which shall address all issues requested by the Department of Utilities and meet all the requirements of the VDH, for approval of both of these entities.

2.3 Sanitary Sewerage

2.3.1 Sanitary Sewer Location

Sanitary sewer mains should be installed in easements outside of existing VDOT maintained right-of-way. Sanitary sewer mains to be installed in streets that will become VDOT maintained right-of-way must be done so in accordance with the requirements of the most current versions of all pertinent VDOT standards, specifications, and regulations..

Where approved by VDOT, on a case by case basis, construction of sanitary sewer lines parallel to the right of way may be allowed to be located in the roadway. This approval shall, in part, be based upon the density of the development and the practicality of placing the sanitary sewer lines outside of the pavement area. The sewer line shall be constructed in the centerline of the outermost lane, except when this space has been previously used by another utility or when the width of the street justifies two lines. Sewer lines shall not be constructed in the vehicle wheelpath. The determination of the number of lines shall be made by the Spotsylvania County Utilities Department during the plan review process. All sanitary sewers shall be laid on a straight line and straight grade between manholes. All sewer laterals shall be constructed to the edge of the right-of-way during initial construction to eliminate the need for open cuts to make service connections.

In a parallel installation sanitary sewer lines and/or manholes shall be located at least 10 feet horizontally from any water main whenever possible. The distance shall be measured edge to edge between the structures and/or pipes.

In accordance with the VDH requirements, when local conditions prevent a horizontal separation of 10 feet, a sanitary sewer may be closer to a water main provided that:

1. The bottom of the water main is at least 18” above the top of the sewer.

2. Where the water main cannot be located at least 18” above the top of the sewer, the sewer shall be constructed of AWWA approved water pipe and shall be pressure tested to assure water tightness prior to backfilling. For gravity mains, the test pressure shall be 5 psi, or a pressure greater than the pressure exerted by a column of water equal to the depth of the deepest section of the sewer being tested, whichever is greater. The test pressure shall be held for a minimum of 2 hours. For force mains, the test pressure shall be the working pressure of the mains plus an allowance of 50% for surge. The test shall be conducted in accordance with the pressure test procedure for water mains.

3. Sanitary sewer manholes located within 10 feet of water mains shall be of watertight construction and be tested in place by vacuum testing.

In a crossing installation, sanitary sewers crossing water mains shall be laid to provide a separation of at least 18" between the bottom of the water main and the top of the sewer whenever possible.

When conditions prevent a vertical separation of 18", the following shall be used:

1. Sewers passing over or under water mains shall be constructed of AWWA approved water pipe and shall be pressure tested to assure water tightness prior to backfilling. The test pressure shall be 5 psi, or a pressure greater than the pressure exerted by a column of water equal to the depth of the deepest section of the sewer being tested, whichever is greater. The test pressure shall be held for a minimum of 2 hours.

2. In addition, water mains passing under sanitary sewers shall be protected by providing:

   A. A vertical separation of at least 18" between the bottom of the sewer and the top of the water mains.

   B. Adequate structural support for the sewers to prevent excessive deflection of the joints and settling on and breaking of the water mains.

   C. A full section of water pipe centered at the point of crossing so that the joints will be equidistant and as far as possible from the sewer.

Where the sanitary sewer is installed parallel to a storm sewer, there shall normally be minimum of 5 feet of horizontal separation, measured edge to edge, between them. Under unusual conditions, the County may reduce this requirement.

The carrier pipes within bores for sanitary sewer installation shall be restrained mechanical joint ductile iron sewer pipe, H2 sewer safe Griffin Pipe with Protecto 401 ceramic epoxy or approved equal.

Where a sewer pipe is located within 2,000 feet downstream of the discharge end of a force main, the pipe shall be constructed of PVC materials. If ductile iron pipe is required within 2,000 feet of the discharge end of a force main because of lack of cover, lack of separation, or any other reason, the pipe shall have a special interior lining resistant to corrosion by hydrogen sulfide. The special coating shall be approved by the Department of Utilities. If in the County's judgment, corrosion by hydrogen sulfide will continue to be a problem for more than 2,000 feet, corrosion resistant materials shall continue to be used for an appropriate distance from the discharge end of the force main. The Applicant shall determine, in consultation with the pipe manufacturer, additional areas of pipe, which may require special interior lining. Conditions requiring special interior lining may include but are not limited to areas of warm temperatures, low operating velocities, high turbulence, partially full flows, and/or long retention times.

All sanitary sewer line crossings of railroads, major roadways, and other major structures shall be contained in a casing pipe. The design of railroad crossings shall comply with the requirements of American Railway Engineering Association Specifications, "Part 5 – Pipelines" (latest revision). The Applicant shall be responsible for obtaining required railway permits and/or

agreements for the County, paying any fees, and posting any required construction bonds and occupation fees for the railway crossing prior to beginning construction on any part of the project. A copy of the permit and/or agreement shall be provided to the Department of Utilities prior to a Construction Permit being issued for the project.

Ductile iron sewer pipe, protecting the sewer main from point loading proposed by the Applicant, shall be used for sanitary sewers when crossing storm sewers or other rigid underground conduits with less than 12” of vertical separation.

The top of sewers crossing streams shall have a minimum of 3 feet of cover from the natural stream bottom. Less cover will be considered if the proposed sewer crossing is contained in a steel casing pipe with a ductile iron carrier pipe used, and the sewer will not interfere with future improvements to the stream channel. The sewer trench within the stream bed shall be protected from erosion by the use of rip-rap, gabion mats, or other appropriate measures to include specific bedding design for the stream crossing. See the Stream Crossing Standard Detail for the typical crossing design. The Applicant shall be responsible for obtaining all required environmental permits for stream crossings and construction activities. Use of concrete in a stream bead is discouraged due to the disruption to natural movement of the streambed.

Sewer pipe with less than 4 feet of cover installed within a 100-year flood plain shall be checked for flotation. Flotation calculations shall assume the pipe is empty. Non-float pipe shall be utilized if appropriate. Other anti-flotation methods or devices will be considered on an individual basis.

Clay dams shall be utilized in the trench where the possibility exists that ground water will follow the sewer trench and cause damage to property or undermine the pipe bedding.

Sewer lines located under paved channels or concrete channels shall be located at least 2 feet below the bottom of the channel pavement.

Sanitary sewers constructed in fill shall be of ductile iron sewer pipe with manholes founded on original ground, either through a specifically designed foundation transferring the load to original ground or by placing the base slab on original ground, unless a licensed geotechnical engineer furnishes a written certification that the fill has been sufficiently compacted so that settlement of the sewer and/or manhole will not occur.

Sanitary sewers shall be designed to remain fully operational during a 25-year flood event. Sewers and their appurtenances located along streams shall be protected against the normal range of high and low water conditions, including the 100-year flood. Sewers located along streams shall be located outside of the streambed and sufficiently removed from the stream channel to provide for future possible channel widening or meandering. Sanitary sewers crossing streams, estuaries, lakes, or reservoirs shall be constructed of watertight pipe. The pipe and joints shall be tested in place and shall exhibit zero infiltration. Sewers laid on piers across ravines or streams shall be allowed only when it can be demonstrated that no other practical alternative exists. Construction methods and materials of construction shall be such that sewers will remain watertight and free from change in alignment or grade due to anticipated hydraulic and physical loads and erosion.

In cases where sanitary sewers are to be constructed on steep grades and velocities greater than 15 feet per second are predicted, solid-walled PVC pipe shall be used.

Sanitary sewers shall not be laid at a slope greater than 20 percent. Sanitary sewers laid on a slope of 18 percent or greater shall be anchored securely with concrete anchors or other approved means. The Engineer shall determine the method of anchorage. The details of anchorage must be shown on the construction plans before the plans will be approved by the Department of Utilities.

2.3.2 Depth Of Sanitary Sewer Lines

All sewer lines shall be designed to provide a minimum cover of 4 feet over the pipe unless otherwise approved by the Department of Utilities. The maximum depths of sewers shall be 20 feet unless otherwise approved by the Department of Utilities. Sewers located adjacent to streams and swales shall be located deep enough so that adjoining areas on the opposite side of the stream or swale can be served by the sewer while maintaining the minimum cover requirements for stream crossings as outlined in Section 2.3.1.

2.3.3 Sanitary Sewer Manholes

Manholes shall be constructed in accordance with Spotsylvania County's standards and details. See §3.3.2.2 of this manual for construction specifications.

On a given project all manholes shall be of the same construction and all cleanouts shall be of the same construction.

Manholes shall be located at the end of each line, at all changes in pipe size, at all changes in grade or direction, at all changes in material, and at sewer junctions. Maximum spacing between manholes on straight runs shall be 400 feet for sewers 15" or less in size and 600 feet for sewers 18" and larger.

"Doghouse" or "cut-in" manholes are not permitted.

Steps are **not** to be installed in sanitary sewer manholes unless approved by the Utility Department.

5' diameter manholes shall be used when the depth of the manhole is 18' or greater.

If a manhole is located within 2,000 feet downstream of the discharge end of a force main, the manhole shall have an interior coating or liner resistant to corrosion by hydrogen sulfide. Coatings and liners utilized shall be approved by the Department of Utilities. If, in the County's judgment, corrosion by hydrogen sulfide will continue to be a problem for more than 2,000 feet, corrosion resistant materials shall continue to be used for an appropriate distance from the discharge end of the force main.

Unvented sections of sewer shall not exceed 1,000 feet in length.

The deflection of horizontal flow direction from any incoming pipe to any outgoing pipe in a manhole shall not exceed 90 degrees.

Drop manholes shall be used when the invert elevation of the incoming sewer line exceeds the invert elevation of the outgoing sewer line by 2 feet or more. One (1) internal drop is allowed per 4' diameter manhole. If two or more drops are necessary the manhole diameter must be increased to 5'.

Manholes subject to flooding shall have watertight manhole covers.

Vandal-proof manhole lids shall be used for manholes located in easements unless watertight covers are required. The rims of manholes in off-site easements shall be placed at least 18" above final ground elevation and shall be marked with fiberglass manhole markers visible 4' above the ground. The rims of manholes located in maintained easements shall be placed flush with the final grade and the 4' marker requirement shall be waived.

Monitoring manholes shall be provided on the service lines for all facilities producing non-domestic wastewater governed by the Spotsylvania County "Sewage Use Ordinance and Pretreatment Ordinance". Monitoring manholes are owned by the property owner and shall be easily accessible. The County shall be given the right of access to monitoring manholes at all times.

2.3.4 Sewer Service Connections

Service connections shall be provided in accordance with the County ordinances, specifications, and details. During site construction the cleanout riser will be brought to 4 feet above the surface. Cleanout service connections are to be provided to the edge of the easement, property line, or right-of-way, with the wye plugged, as appropriate, for all lots and parcels within new developments unless otherwise approved by the Department of Utilities.

Service connections shall have a maximum depth of 12 feet at the connection to the main. The minimum diameter pipe to be used for a service connection is 4 inches. The minimum grade for service connections shall be 2.08 percent (1/4" per foot). A cleanout is to be provided on all service connections at the edge of the easement, property line, or right-of-way. Service laterals shall be Schedule 40 PVC.

"Hung" Sewers are encouraged when the basement floor elevation is below the receiving sewer main. A backflow preventer must be installed and will be inspected by a County building inspector.

2.3.5 Sewer Structural Design

The minimum pipe size for all gravity sewer mains shall be 8".

Structural requirements must be considered in the design of all sanitary sewers and appurtenances. This is a matter of detail design and is not subject to generalization. The following should be considered at a minimum:

1. Special Structures: whenever possible sanitary sewer structures shall be built as shown in the standard details. Structures other than those shown in the standard

details shall be considered special structures and shall be designed and detailed by a Professional Engineer licensed in the Commonwealth of Virginia.

2. Flotation: Sewers shall be designed to resist flotation where such conditions may reasonably be expected to exist. See § 2.3.1

3. Manholes 18' or deeper shall be 5-feet in diameter.

2.3.6 Hydraulic Design For Sanitary Sewers

The quantity of sewage for design purposes shall be determined by the requirements of the total drainage area, which is tributary to the section of sewer under consideration in its built-out condition, unless otherwise approved by the Department of Utilities.

Until site specific information has been established the average quantities of sewage shall be computed using the following values, which include a minimum infiltration allowance:

Land Use	Gallons per Day per Acre	Equivalent Persons per Acre
Residential - 1 to 2 dwellings/acre	500	5
Residential - 2 to 4 dwellings/acre	1,200	12
Residential- 4 to 8 dwellings/acre	2,500	25
Agricultural	500	5
Commercial-Retail	2,000	20
Commercial-Office	1,500	15
Industrial-Light	2,000	20
Industrial-Medium	3,500	35
Industrial-Heavy	3,500	35

Where site-specific determinations can be made, sewage flows may be determined by using the following specific design information:

Facility to be Served	Design Units	Flow (gpd)
Single Family Residential	3.5 people/unit	350
Three Bedroom Apartment	3.5 people/unit	350
Two Bedroom Apartment	3 people/unit	300
One Bedroom Apartment	2 people/unit	200
Three Bedroom Condo	4 people/unit	400
Two Bedroom Condo	3 people/unit	300
Elementary School	per person	10

High School	per person	16
Motel and Hotels	per room	130
Trailer Courts	per trailer	300
Restaurants	per seat	50
Service Stations	per vehicle serviced	10
Factories	per person per 8 hour shift	25
Shopping Centers	per 1,000 sq. ft.	250
Hospitals	per bed	300
Nursing Homes	per bed	200
Homes for the Aged	per bed	100
Medical Center	per 1,000 sq. ft.	500
Laundromat	per washing machine	500
Theaters	per seat	5
Bowling Alleys	per lane	75
Office Buildings	per 1,000 sq. ft.	200

Flows for other uses may be determined by using flow information provided by the Applicant and approved by the Department of Utilities.

Peak flows shall be utilized for design of sanitary sewers. Peak flows shall be determined in accordance with the Virginia SCAT Regulations as follows:

For “Lateral” sewers, sewer pipes that do not receive flow from any other common sewer, and “sub-main” sewers, sewer pipes that receive flow from only lateral sewers, peak flows will be 4 times average flows.

For “Main” or “trunk” sewers, sewer pipes that receive flow from multiple sub-main sewers, peak flows shall be 2.5 times the average daily flow.

For “Interceptor” sewers, sewer pipes that receive flow from multiple main sewers, peak flows shall be 2.0 times the average daily flow.

1. Sewers shall have a continuous slope, straight alignment, and uniform pipe material between manholes.

2. At all junctions where a smaller diameter sewer discharges into a larger one and at all locations where the line increases in size, the invert of the larger sewer shall be set so that the energy gradients of the sewers at the junction are continuous through the manhole. This condition may be met by matching the crowns of the two pipes

3. Sewers shall be designed to be free flowing with the hydraulic grade line no higher than the crown of the sewer and with slopes sufficient to provide an average velocity, when flowing full, of not less than two feet per second. Computations of velocity of flow shall be based on a Manning coefficient of 0.013.

4. The following are minimum slopes in feet per hundred feet to be provided for sewer lines. Slopes greater than minimum are desirable. Pipe size shall not be increased solely to reduce required slope unless approved by the Department of Utilities.

Pipe Size	8”	10”	12”	15”	18”	21”	24”	27”	30”	36”
Slope (%)	0.40	0.28	0.22	0.15	0.12	0.10	0.08	0.067	0.058	0.046

5. In cases where sewers are to be constructed on steep grades the slope shall not exceed 20%. Suitable drop manholes shall be provided to break the steep slopes and to limit slope to no more than 20% in the connecting sewer pipes between manholes.

6. Miscellaneous head losses at manholes, curves, and junctions shall be estimated and allowed for as follows:

   a. In sewers 24” and less in diameter, allow head loss equal to at least 0.10 feet at each manhole. The Department of Utilities may allow this to be reduced to 0.05 feet under special circumstances.

   b. At transitions and intersections of sewers larger than 24” in diameter, allow $0.50\ V^2/2g$, where “V” is the velocity in the downstream pipe assuming pipe full conditions (feet per second) and “g” is the gravitational constant of 32.2 feet per second squared.

7. The pipe diameter should be continually increasing with the increase in tributary flow. Where steep ground slopes make possible the use of a reduced pipe size and substantial economy of construction costs is thereby indicated, the pipe size may be reduced, but hydraulic allowances shall be made to provide for head loss at entry, increased velocity and effect of velocity retardation at the lower end where the flow will be on flatter slopes. In no case shall pipe size be reduced more than one nominal size in diameter.

8. The minimum pipe size for gravity sewers shall be 8-inches.

The hydraulic computations shall be submitted to the Department of Utilities for approval. The Engineer shall submit with all sewer plans information and calculations on sewer flow demands, sewer shed drawings including tributary areas, sewer capacities for the project, and, if requested, an analysis of downstream capacity of existing improvements.

2.3.7 Sewage Pump Stations And Force Mains

The current edition of the Spotsylvania County Water/Sewer Master Plan identifies regional sanitary sewerage and water pumping stations. Pumping stations not previously identified in the Water/Sewer Master Plan will not be considered unless such pump stations meet interim utility planning objectives.

The pump station design shall be in accordance with the approved preliminary engineering report. At a minimum, the following information shall be provided in the construction plans:

1. Structural design and calculations, including steel reinforcement drawings where applicable, for the facility,
2. Hydraulic design for the equipment selected, including scaled drawings,
3. Electrical and mechanical drawings and specifications for the equipment selected,
4. Project specifications,
5. Pump and system head curves,
6. Site Plan.

The construction plans shall be approved by the Department of Utilities and the DEQ.

All pump stations will have a permanent engine driven direct drive power pack generator and automatic transfer switch that will handle the starting and operating load of all equipment needed for sustained operation as per the SCAT regulations. The type of fuel for the generator i.e., diesel, gasoline, or propane, shall be at the discretion of the Utilities Department.

SCADA systems shall be required with all new pump stations. The SCADA will be consistent with the most current type being utilized for existing pump stations, and must be acceptable to the Utilities Department.

Sanitary sewage force mains shall be ductile iron pipe, with a corrosion resistant 401 ceramic epoxy coating or approved equivalent, PVC, AWWA C-900, pipe, or other pipe approved by the Department of Utilities. Force mains are to be designed with a minimum flow velocity of 2.0 feet per second and a maximum flow velocity of 8.0 feet per second. A Hazen-Williams “C” value of 120 shall be used for design. Minimum force main size shall be 4” in diameter. A constant grade shall be used where feasible. Valves and air releases will be provided where directed by the Department of Utilities. Minimum cover on force mains shall be 3.5 feet.

Manholes receiving the discharge from force mains shall be designed in accordance with the County’s standard details. In addition, special acid-resistant manholes and sanitary sewer pipe

shall be provided downstream of the discharge point for a minimum of 2,000 feet. On existing systems, manholes shall receive an approved PVC liner or other liner approved by the Department of Utilities.

2.3.8 Grease Interceptors

All non-domestic facilities dealing with grease shall, at the Owner's expense and as required by the Department of Utilities:

1. Provide a set of plans for review and approval by the Department Utilities and the Department of Code Compliance.
2. Provide an adequately sized grease interceptor.
3. Locate the interceptor in a manner that provides ready and easy accessibility for inspection and cleaning.
4. Maintain grease interceptors in continuous proper operating condition, further the Owner shall be responsible for all repairs, replacements, maintenance costs, or any other fees not specified in this section.
5. Unless otherwise specified by the Department of Utilities, service the grease interceptor at a minimum of every six (6) months,

Sizing Requirements:

The recommended minimum size for an exterior grease interceptor is 1,000 gallons. The generator may supply sizing information for a smaller unit, but under no circumstances shall an exterior grease interceptor have a capacity of less than 500 gallons.

Design Considerations:

1. Except for grease traps, each grease interceptor shall be located outside of a building or structure at least ten feet from any sink or dishwasher to allow proper cooling of wastewater, in an area accessible for service, and so installed and connected that it shall be at all times easily accessible for inspection, cleaning and the removal of intercepted waste. The inlet flow control inspection ports, the interceptor inspection ports, and the effluent monitoring ports shall be in area where vehicles may not temporarily block access, the use of ladders or the removal of bulky equipment or stored materials in order to inspect any of the components of the grease interceptor shall constitute a violation of accessibility. The location of all inspection and motoring ports shall be included on the building plans and must meet the approval of the Department of Utilities.
2. The grease interceptor shall be constructed of impervious materials capable of withstanding abrupt and extreme changes in temperature. It shall be of substantial construction and shall meet all applicable loading criteria for locations subject to vehicular traffic loads. The structure shall be made watertight through bituminous coatings, joint gaskets, and pipe connection gaskets/seals.
3. The grease interceptor shall be properly vented to allow flow through the unit without creating potential odor problems.

4. Inspection ports shall be installed prior to the influent flow control device and for each compartment of the unit.
5. An effluent monitoring port shall be provided for ease of sampling the discharge from the interceptor. The monitoring port shall be, within the confines of the property boundary, as close as possible to the connection with the POTW, but prior to its combining with any other waste stream. It shall be unlawful for any generator to divert sewage around a monitoring port to the POTW.

3. CONSTRUCTION STANDARDS

3.1 General Requirements

3.1.1 General

A. Construction on any utility project will not be allowed to begin until all criteria of the design review and approval process have been completed, which includes the Department of Utilities receiving a stamped-as-approved set of plans from the Spotsylvania County Planning Department.

B. A preconstruction meeting will be required prior to beginning any work. At least two County working days advance notice must be given to the Department of Utilities' Inspection Section to schedule a preconstruction meeting.

C. Cut sheets are required on all gravity and force main wastewater projects. Cut sheets are required on water line projects where the sub grade has not been installed, in areas where final grades for future roads and paved areas cannot be determined, and on projects where water lines are installed in easements. Three copies of construction cut-sheets shall be submitted to the Department of Utilities prior to the beginning of construction. Cut sheets are to be prepared by a qualified engineer or surveyor. Cut sheets shall include station, offset, existing grade, proposed grade, utility location, size, and material as a minimum, plus temporary bench marks at each manhole on sanitary sewer projects, and at no more than 500 foot intervals on any other project. Cut sheets shall be provided for gravity sewer projects at every manhole. For water main or force main projects cut sheets shall be provided for every valve, fitting, or pipe feature, excluding services, and at intervals not to exceed 150 feet.

D. Prior to the installation of water mains, unless waived by the Inspector, an Engineer or surveyor must certify in writing that:

1. All pavement and shoulder areas within the right-of-way are graded to within 6" of sub grade.

2. All ditches and slopes to 1 foot outside the right-of-way have been graded to final grade.

E. The Contractor shall comply with erosion and sediment control requirements of the County and the requirements of the projects land disturbance permit, if one is required, before beginning clearing or construction.

F. The Contractor shall comply with the requirements of permits issued by Spotsylvania County, VDOT, and other agencies.

G. It shall be the responsibility of the Applicant or his agent to acquire all easements necessary for water and/or sewer installation. Easements shall be obtained,

recorded, and the instrument number noted on the as-built plans. Deeds for easements shall be in a form acceptable to the County. The Applicant shall adhere to any special agreements negotiated with the landowner regarding restoration of the easement in addition to the usual and customary requirements of the Department of Utilities.

H. The Contractor shall notify all adjoining property owners at least two (2) weeks in advance of the start of any work in an off-site easement. The County may require such notification to be in writing, if so, copies of the letter shall be presented to the County at the preconstruction conference.

I. The Contractor shall make all reasonable efforts to keep construction noise at a minimum. The Contractor shall comply with the County's Noise Ordinance at all times.

3.1.2 Laws And Regulations

The Contractor shall abide by all Federal, State, and local regulations, rules, laws, and ordinances, which may in any manner affect those employed or engaged in the work, or in any way affecting the conduct of the work.

3.1.3 Materials And Workmanship

It is the intent of the County's specifications to describe in general and broad terms the character of materials and workmanship required with regard to all ordinary features, and to require first-class work and materials in all particulars. For any unexpected features arising during the progress of the work and not fully covered in the specifications, the County shall require first-class work to be performed and first class materials to be used by the Contractor.

The County reserves the right to employ an independent testing laboratory to conduct tests, in addition to those to be completed by the Applicant and/or Contractor, of materials, soils, workmanship, facilities, or other items as the County may deem necessary to assure complete compliance with the requirements of the County's specifications. The Applicant and Contractor shall offer full cooperation with personnel in the employ of the County in making these tests. If any such test completed by the County shows that substandard work has been performed or materials provided, the Applicant shall be charged the County's cost for completing these tests. The Department of Utilities will not issue a letter of "Final Acceptance" for any part of the water or sewer system serving the project until all such charges have been paid.

3.1.4 No Deviation By the Contractor From Approved Plans and Specifications

The Contractor shall not deviate from the plans, profiles, cross-sections, and specifications without the written approval of the County. If deviation occurs on the part of the Contractor, he shall correct the error at his expense in a manner satisfactory to the County.

3.1.5 Use of Water

No water shall be drawn from the County's facilities for the testing, flushing, or other purposes of newly installed or repaired lines until suitable arrangements have been made with the Inspector. All other incidental water uses will be covered under the Department of Utilities fees.

3.1.6 Clean Up and Restoration

Upon completion of the project, before the final inspection of the work and acceptance by the County, the Contractor shall remove any debris and sediment from any installed piping. The worksite, including all rights-of-way, shall be cleaned up by removing all trash and debris, all machinery, tools, surplus material, temporary buildings, and any other construction-related structures from the site of the work. The worksite shall be restored to a condition equal to or better than condition in which it was prior to the construction. Areas not stabilized otherwise shall be seeded or mulched.

3.2 Trenching, Backfilling And Compaction

3.2.1 General

3.2.1.1 Quality Assurance

All work shall conform to County of Spotsylvania requirements and, where construction is within a State right-of-way, the applicable requirements of VDOT.

3.2.1.2 Safety

The Contractor is responsible for job site safety. The Contractor shall comply with all applicable safety rules and regulations of OSHA, VOSH, and other agencies having jurisdiction over the work, including but not limited to the Virginia Work Area Protection Manual and the "Virginia Overhead High Voltage Line Safety Act". All safety measures related to, but not necessarily limited to, trenching, confined space, traffic control, and other applicable safety measures, shall be strictly adhered to and enforced by the Contractor.

3.2.1.3 Job Conditions

A. Protection of Existing Utilities: It shall be the responsibility of the Contractor to conduct the work in such a manner as to avoid damage to or interference with, any existing utility services. This shall include taking preventive measures, such as plugging or otherwise securing all openings, to exclude the introduction of dirt, stone, construction materials, or any other debris into the existing pipe or service connection. If such damage, interference, or interruption of service occurs as a result of his work, it shall be the Contractor's responsibility to promptly notify the County and utility owner of the occurrence and to repair or caused to be repaired the damage immediately, at his own expense, and to the satisfaction of the County and the owner of the utility. Further, it shall be the Contractor's responsibility to uncover and expose the location of all service connections to avoid damage or

interruption of service. If damage occurs, the Contractor shall make the necessary repairs in accordance with the above requirements. It is also the responsibility of the Contractor to determine in advance of beginning his construction effort the exact location of all utilities, and the effect they will have on his work by contacting "Miss Utility" 48 hours prior to starting work, telephone 1-800-552-7001 for assistance.

B. Protection of Persons and Property:

1. Barricades for open excavations or work area shall be provided. All such barricades shall be in accordance with the requirements of the authorities or agencies having jurisdiction.

2. Structures, utilities, sidewalks, pavements, and other facilities shall be protected from damage caused by settlement, lateral movement, undermining, washout, and other hazards created by work or other operations in the area.

C. The equipment used for this work shall meet all local, State, and Federal safety standards governing this work. All power machinery shall have adequate mufflers to keep noise to a minimum. The Contractor is responsible for complying with the requirements of the County's noise ordinance.

3.2.2 Products

3.2.2.1 Soil Materials

Definitions:

A. Unsuitable Soil Materials: Soil that is too wet to permit proper compaction as determined by the Inspector or not appropriate for the use intended as defined in these specifications.

B. Soil Backfill and Fill Materials:

1. Approved excavated or imported soil materials must be free of rock or gravel larger than 2" in any dimension, debris, waste, frozen materials, organic, and other deleterious matter.

2. Approved materials must be at a moisture condition suitable for compaction at required density.

C. Aggregate Materials (Sand, Stone, and others):

Aggregate materials will be defined using the latest edition of the Virginia Department of Transportation Road and Bridge Specifications, "2." Approved materials must be at a moisture condition suitable for compaction at required density.

3.2.3 Execution

3.2.3.1 Inspection

The Inspector shall examine the areas and conditions under which excavating, filling, and grading are to be performed and notify the Contractor of any conditions that may be detrimental to the proper and timely completion of the work. The Contractor shall not proceed with the work until unsatisfactory conditions have been corrected in a manner acceptable to the County.

3.2.3.2 Excavation

A. Excavation consists of removal and disposal of material encountered when establishing required trench elevations. Unauthorized excavation consists of removal of materials beyond indicated elevations or dimensions without specific direction from the County.

B. Unsuitable soil shall be removed to a depth determined by the Inspector and replaced with No. 57 stone, or other material approved by the Inspector, which shall be uniformly and thoroughly compacted.

C. Sheeting, Shoring, and Bracing: Provide sheeting, shoring, and bracing as necessary to prevent cave-in of excavation or damage to existing structures on or adjoining the site.

1. Establish requirements for trench shoring and bracing to comply with codes and authorities having jurisdiction. The Contractor's attention is called to Rules and Regulations Governing the Safety and Health of Employees Engaged in Construction as adopted by the Safety and Health Codes Commission of the Commonwealth of Virginia and all latest revisions thereto and issued by the Department of Labor and Industry.

   The Contractor shall perform all construction operations in accordance with the U.S. "Occupational Safety and Health Act of 1970", the Standards of the U.S. Department of Labor, OSHA, and the latest amendments thereto.

2. Sheeting, shoring, and bracing may be left in place with the approval of the utility owner and VDOT if within a State right-of-way, but must be cut off to a depth of not less than two (2) feet below the surface.

D. Dewatering: Prevent surface water and subsurface or groundwater from flowing into excavations and from flooding project site and surrounding area.

1. Dewatering shall not be done by draining into existing sanitary sewer

2. Do not allow water to accumulate in excavation. Provide and maintain pumps, well points, sumps, suction and discharge lines, and other dewatering system components necessary to convey water away from

excavations. Dewatering shall continue until backfilling has been completed.

3. Convey groundwater and surface water removed from excavations to collection or run-off areas approved by the County. Trenches shall not be used as temporary drainage ditches.

4. All dewatering shall comply with the requirements of the latest edition of the Virginia Erosion and Sediment Control Handbook.

E. Stability of Excavations:

1. Slope sides of excavations to comply with local, State, and Federal codes and ordinances having jurisdiction. Shore and brace where sloping is not possible because of space restrictions or because of the instability of the material being excavated.

2. Maintain sides and slopes of excavations in a safe condition until completion of backfilling.

F. Material Storage:

1. Stockpile approved excavated materials where approved by the County, until required for backfill or fill.

2. Place, grade, and shape stockpiles for proper drainage.

3. Locate and retain soil materials away from edge of excavations.

4. Dispose of excess soil material and waste materials as hereinafter specified.

5. Stabilize soil stockpiles with temporary seeding as required.

G. Excavation for Trenches and Structures:

1. Trenches shall be opened only so far in advance of pipe laying as the County will permit and in no case will this distance exceed 300 feet. The width of the trench at and below the top of the pipe shall not exceed the outside diameter of the pipe plus twenty-four inches (24”). The trench walls above the top of the pipe may be sloped or the trench above the top of the pipe may be widened as necessary for bracing, sheeting, and shoring. Where these trench widths are exceeded, the Contractor will be required to mechanically tamp an approved backfill material from the bottom of the trench to six (6) inches above the top of the pipe as directed by the County and the trench re-excavated to the proper dimension.

2. Excavate trenches to the depth indicated or required. Carry the depth of trenches for piping to the indicated flow lines and invert elevations.

3. Grade bottom of trenches as indicated. Notch under pipe bells to provide solid bearing for the entire body of the pipe.

4. The trench shall be in accordance with the County Standard Details.

5. Cold Weather Protection: Protect excavation bottoms against freezing.

6. Excavation for structures shall conform to the lines and grades as shown, established, or as necessary. Where the bottom of the excavation is in unsuitable material, such material shall be excavated to a depth of one foot below the bottom of the structure or to a depth required by the County and replaced with No. 57 stone, coarse sand, or other material approved by the County. Bottoms shall be planked or covered with appropriate fabric if necessary to prevent the mixture of native in-place materials with the backfill material. All sheeting, bracing, and shoring required for safety shall be installed in conformity with applicable rules and ordinances.

3.2.3.3 Hardpan Excavation

Hardpan is classified as clay, shale, or sand indurate, or hardened, with a cementations material, which requires loosening with an air spade or blasting before it can be removed from the trench. The same clearances shall be made between the pipe or structure and hardpan material as is described hereinafter for rock excavation.

3.2.3.4 Rock Excavation

A. Definition: Rock excavation shall comprise solid rock in the original bed or well defined ledges and which can only be removed by blasting and/or drilling or by the use of jack hammers, and shall include all boulders or detached pieces of rock one-half cubic yard or more in content.

B. Pipe Trench: Rock shall be excavated a minimum of six (6) inches below the bottom of all pipes. The pipes shall be laid on a cushion of approved material, of sufficient depth to provide the proper grade. A minimum clearance of six (6) inches shall be provided between the vertical walls of the trench and the bell of the pipe.

C. Structures: Rock excavation for structures shall extend a minimum of eight (8) inches below the bottom or base of structure and suitable bedding shall be provided. A minimum clearance of six (6) inches shall be provided between the rock and the exterior face of the structure when forming is not used. The minimum clearance shall be two (2) feet when forming is used.

3.2.3.5 Blasting

A. Blasting operations shall be in strict accordance with Rules and Regulations Governing Manufacture, Storage, Handling, Use, and Sale of Explosives issued by the Department of Labor and Industry of Virginia and any County ordinances. All blasting shall be done at the sole risk of the Contractor and shall be done only by experienced licensed personnel. Occupants of nearby structures shall be notified prior to beginning blasting operations. The blasting operation and notification schedule shall be coordinated with the County Fire Marshall.

B. When blasting is required, the Contractor shall conform to the following requirements:

1. Blasting shall not be permitted before 9:00 A.M. or after 4:00 P.M. Monday through Friday.

2. Blasting on Saturdays, Sundays, or holidays shall not be permitted.

3. The Contractor shall, each day when necessary to blast, set up an approximate schedule of blasting operations, and provide 24 hours notice to the County and property owners with occupied buildings within 1000 feet of blasting.

4. The Contractor shall use mats to minimize noise and control flying debris.

5. The Contractor shall obtain all required permits.

3.2.3.6 Backfill For Trenches

A. After the installation of the pipe has been field inspected, the trenches shall be backfilled as specified and shown in the County Standard Details or VDOT Standard details (specifically the latest version of the LUP-OCPR detail), and all related VDOT standards, specifications, and regulations if in the right of way.

B. Pipe shall have minimum bedding as shown on the County Standard Details. Pipe bedding shall be VDOT #5 or #57 stone.

C. Trenches shall be constructed in accordance with Spotsylvania County details or VDOT requirement, whichever is more stringent. The initial backfill shall be carefully compacted by hand or pneumatic tamping methods under the pipe, on both sides of the pipe, and above the pipe. Materials shall conform to the following:

1. Controlled Fill

a. as Roadbed fill shall consist of suitable imported on-site materials per the VDOT OCPR detail and approved by VDOT for use in the roadway prism.

b. Materials placed in a trench excavated in the roadway: Borrow materials for backfill operations must have a minimum CBR of 15. Suitable materials for fill (minimum CBR of 15) shall consist of any approved material imported or excavated from the cut areas, shall contain no rocks or gravels greater than two inches (2”) in size, and shall contain at least 40 percent of material smaller than one-fourth inch (1.4”) in size. No material of a perishable, spongy, or otherwise improper nature shall be used as fill. Materials classified as SM or SC in accordance with ASTM D2487 shall be used.

2. Select Backfill

a. Imported materials placed under pavement: VDOT 21A

b. All other areas in right-of-way to be maintained by VDOT: Materials classified as SM or SC in accordance with ASTM D2487, free of rock or gravel larger than two inches (2”) in any dimension, debris, waste, frozen materials, organic material, and other deleterious matter. The plasticity index shall be less than 20.

3. Bedding

Where directed by County, Owner, or VDOT Inspector, bedding stone shall be wrapped in geosynthetic filter fabric.

a. Watermains: VDOT #5 OR #57 stone unless otherwise required by the County or VDOT.

b. Sanitary Sewer: VDOT #5 or #57 stone

4. Unsuitable Material

Any material that contains more than 5% by weight organic matter, or that having unstable bearing capacity, excessive moisture content, roots, mulch, debris, waste, or frozen materials

D. After the initial backfill has been placed, the remainder of the backfilling may be done by hand or with mechanical equipment in lifts no greater than 8” loose / 6” compacted lifts.

E. Where settlement occurs, the trench shall be refilled, contoured, and compacted by an approved method to conform to the surface of the ground.

F. Sheeting and bracing shall, in general, be removed as the backfilling progresses, and in such a manner as to avoid caving of the trench. Voids left by the

withdrawal of the sheeting or shoring shall be carefully filled and rammed. Where, in the opinion of the County, damage is liable to result from the withdrawal of the sheeting, it shall be left in place.

G. No rocks larger than 2" in any dimension should come in contact with pipe.

H Backfill shall be completed in 6-inch layers with the following percentage of maximum density at optimum moisture content as determined by AASHTO T-99.

1. 95 percent within 10 feet of and under pavements, road shoulders, roadside ditches, and other structures.

2. 85 percent for pipelines installed outside of the roadway prism.

I. Under Existing Roadways and Pavement: Backfill for trenches under roadways and other paved areas shall be in accordance with the requirements specified above or, if more stringent, the requirements of VDOT.

J. Clay dams: Clay dams shall be utilized in the trench where the possibility exists that ground or surface water will follow the sewer trench, causing damage or undermining of pipe bedding. Clay dams shall be installed in the trench to prevent groundwater from flowing down the trench and damaging the sub grade as directed by the Inspector. Clay material with an imperviousness of 1x10-5 cm/sec shall be used in clay dams. The Inspector shall approve clay material prior to use.

K. Backfill Placement: Backfill shall be placed so that it cannot get into existing or newly laid pipes, manholes, valve boxes, or any other related structures.

3.2.3.7 Backfill For Structures

Around and adjacent to structures, backfill shall be of material of suitable stability and permeability. Backfill shall be placed in 6 inch lifts, each lift being compacted by an approved method. No backfill shall be placed against a structural wall until all connecting structural members are in place. It shall be the Contractor's responsibility to provide compaction to 95% per ASTM D-698. The Contractor shall provide adequate protection to all structures during backfilling and use every precaution to avoid damaging or defacing them.

3.2.3.8 Compaction

The Contractor is responsible for the correct bedding of utility lines, backfill of pipe trenches, and compaction of backfill for all pipe installations except for parallel installations under the pavement as approved by VDOT. If in the Inspector's opinion, excavated material is not suitable for backfill, imported backfill must be used.

The County shall require that the Contractor have density and compaction tests performed by a certified independent laboratory verifying that the trench backfill has been compacted as required. Any material not compacted as required shall be removed and replaced, re-compacted, and re-tested. The work shall be performed by a qualified testing consultant. Upon completion of each layer of fill in a designated area, adequate time must be allowed for the testing consultant to inspect the tests. Verbal results of tests should be immediately given to the Contractor and Inspector. Copies of the test results shall be furnished to the County within 72 hours of the conclusion of the test.

Prior to final acceptance of the project by the county, certification by a P.E. must be supplied to the county, showing that the approved plan was followed and the results thereof complied with the compaction testing specifications.

3.2.3.8.1 Compaction and Inspection for Public Utilities Under Pavements in VDOT maintained rights-of-way – New Construction

The County or its consultant shall provide testing services for parallel installation of waterlines, sanitary sewers, and appurtenances to be located under pavements in right-of-way to be maintained by VDOT. The Owner shall be responsible for reimbursing the County for all costs associated with reporting, inspection, compaction, and laboratory services related to this installation.

The Reimbursement Agreement in Appendix F of this manual must be executed by the Owner prior to construction It outlines requirements and conditions that need to be met for the County to be reimbursed by the Owner for the County's cost related to geotechnical testing and inspection for water and sanitary sewer utility trenches under the roadway. The agreement is a draft document and specific items related to the project will have to be discussed and agreed upon between the Owner or Owner's representative and the County before construction of public utilities under the roadway can commence. The agreement language will be modified as necessary and will be reviewed by the County Attorney's office before final approval.

Following construction of each site plan, infrastructure plan or section of a subdivision construction plan, the County shall submit one copy of all reports to:

Area Land Use Engineer (North)
VDOT Fredericksburg District
86 Deacon Road
Fredericksburg, VA 22405

3.2.3.8.2 Compaction and Inspection – Testing and Reporting Methods

Any installation of public utilities outside of the right-of-way to be maintained by VDOT shall adhere to County Utility Standard Details for compaction and backfill.

Any parallel installation of public utilities under pavement in the right-of-way shall follow the requirements below as well as the Land Development Inspection Documentation Best Practices Manual and all pertinent VDOT specifications.

A. Test Methods – The following test methods must be used:
   1. VTM-1: Laboratory Determination of Theoretical Maximum Density Optimum Moisture Content of Soils, Granular Subbase and Base Materials
   2. VTM-10: Determining Percent Moisture and Density of Soils Under Asphalt (Nuclear Method)
   3. VTM-12: Use of One-Point Proctor Density
   4. AASHTO-T191: Standard Method of Test for Density of Soil In-Place by Sand Cone Method

B. Testing Frequency – Shall be in accordance with VDOT Materials Division Manual of Instruction Section 309, Project Sampling Testing and Inspection Section 309.01 Density Control, Section (d), Frequency of Field Density Test as modified below:

   1. Backfill for pipes. A minimum of one (1) test shall be performed per 6" lift on alternating sides of the structure for each 100 linear ft. or portion thereof in structure length. This test pattern shall begin after the first 6-in. compacted layer above the structure's bedding and shall continue to one (1) foot above the top of the structure.

   2. Backfill for Manholes: Manholes shall have a minimum of one (1) test performed around the perimeter of the structure every fourth compacted layer to five (5) below the top of the structure; in the top five (5) feet one (1) test every other lift around the perimeter of the structure shall be performed. The test pattern shall begin after the first 4-in. compacted layer above the bedding and shall continue to the top of the structure.

C. Qualifications of Technicians – All field technicians must be certified as a VDOT Soils Compaction Technician

D. Reporting Forms – Shall be in accordance with VDOT Materials TL (Test Log) Forms as shown below:

   a. TL-55 Report of Nuclear Test Section
   b. TL-125A Worksheet for One Point Proctor
   c. TL-125 Report on Sand Cone Density
   d. TL-124 Report of Nuclear Embankment Densities

E. Report Submissions – The owner, developer, or contractor shall submit the above reports, sealed by a Professional Engineer, licensed in the Commonwealth of Virginia, to the Department of Utilities on a weekly basis. Reports shall certify that the construction conforms to the plans and specifications.

Following construction of each site plan, infrastructure plan or section of a subdivision construction plan, the Contractor/Owner/Developer shall submit one copy of all reports to:

Area Land Use Engineer (North)
VDOT Fredericksburg District
86 Deacon Road
Fredericksburg, VA 22405

3.2.3.9 Construction In Public Streets, Roads And Alleys

All requirements of the VDOT permit shall be followed, unless specified otherwise by VDOT. The Contractor's operations in public streets, roads, or alleys, shall be confined to as small a space as is practicable, so as not to cause undue inconvenience to the public or abutting properties, and shall be subject at all times to the approval of the County. Unless otherwise directed by agency controlling the public street, road, or alley being worked in, the Contractor shall perform proposed construction within public streets, roads, and alleys as follows:

A. Water and sewer lines are to cross roadways at right angles and/or to parallel roadways. Uncased utility lines are to be designed to have sufficient strength to withstand dead loads and superimposed live loads. All restoration materials and workmanship shall conform to the latest edition of the Virginia Department of Transportation Road and Bridge Specifications in addition to permit requirements. The Contractor is responsible for obtaining all highway permits and forwarding a copy to the County. Method of construction (trenching, boring, tunneling, jacking, or otherwise) must be shown on permit and plans. The Contractor is responsible for identifying, locating, adjusting, and/or relocating existing utilities, structures, and survey markers (including making all the arrangements necessary to coordinate the work to be performed).

   Nothing contained herein is intended, nor should be construed, to relieve the Contractor in any manner whatsoever of his responsibility for maintaining trenches, pavement structure, shoulders, and generally the work site in an acceptable manner. Prior to the actual open cut, the Department of Utilities and the agency having jurisdiction over the road is to be notified at least 48 hours in advance to arrange a meeting with their representative and the Inspector.

B. Wherever pavement is permitted to be cut, not over one-half of the road width shall be disturbed at one time, unless an approved method of detouring traffic is reviewed and approved by the agency having jurisdiction. The first opening shall be in travelable condition before the second half can be opened.

C. Where the Contractor is granted approval to open cut an existing road, the following requirements shall be complied with:

   1. VDOT is to be notified 48 hours prior to any open cut work being performed.

   2. Work within the roadway shall be done between the hours of 9 A.M. and 4 P.M. or as otherwise required by VDOT.

3. Utilize proper sign layout and channelization devices (i.e., cones, plastic barrels, pavement marking, etc.) during construction, according to VDOT's 2011 (or most current) Virginia Work Area Protection Manual.

4. The area of the open cut shall be restored in accordance with the Spotsylvania County's Detail G-4 or the VDOT LUP-OCPR detail, whichever is more stringent. Any deviations to the details must be approved by the VDOT inspector and Spotsylvania County Utility Department if necessary.

D. Where the Contractor is granted approval to open cut the road for parallel installation within the pavement and service crossings, pavement replacement shall be in accordance with the details reflected in these standards, the approved plans, or the VDOT Land Use permit Special Provisions, whichever is the most stringent.

E. Placement of all plant mix courses shall be rolled where possible with a unit having a manufacturer's rating of 10 tons, and rolled until the aggregate is keyed into the bitumen. Where rolling is not possible, a mechanical tamp will be used. The stone is to be placed in the trench daily up to 1,500 feet, at which time the pavement shall be covered with a temporary or permanent asphalt patch. If the application of the bituminous layer is delayed for adverse weather conditions, the Contractor shall provide and maintain a base course that is acceptable to VDOT and the Department of Utilities until such time as the appropriate pavement patch can be applied and accepted.

F. Upon completion of the installation of the water and sewer lines (not necessarily all testing completed), Contractor shall restore pavement in the manner prescribed on the VDOT permit within ten (10) days. All trenches and repaving shall be maintained in accordance with the highway permit. All structures (valves, manholes, or other utility items) in the roadway must be adjusted to the proper height to be flush with the pavement.

G. Site Maintenance and Restoration: Road connections and private entrances are to be kept in a satisfactory condition. Entrances are not to be blocked and sufficient provisions made for safe travel to adjacent property at all times. When entrances are disturbed, they must be restored to original condition or to a condition satisfactory to VDOT, the Department of Utilities, and the property owner. Road drainage is not to be blocked. The pavement, shoulders, ditches, general roadside, and drainage facilities shall be left in as good condition as found (consistent with adjoining sections of the highway), maintained in a satisfactory condition, and establish positive drainage in the ditches. All loose material shall be swept from hard surface immediately after backfilling. Calcium chloride before sweeping or approved alternate shall be used to settle dust whenever necessary. Concrete walks and curbs shall be replaced in entire sections. During rainy periods all trenches shall be watched closely for settlement. If emergency situation arises under any circumstances, repairs will be made at no expense to the County. Additionally, after paving is complete per VDOT standards, the repairs for any settlement of

trenches requiring additional fill, pavement, or other corrective measures shall be made in accordance with VDOT standards and regualtions, this includes future State or private roads currently owned by the Applicant, and shall be provided at no expense to the County.

H. Work Zone Protection: The Contractor shall immediately correct any situation which may arise as a result of construction that the Department of Utilities deems hazardous to the traveling public. The Contractor shall comply with the requirements of the agency that issued a permit for the construction.

I. Traffic is not to be blocked, rerouted, or otherwise impeded without written permission from the appropriate agency. Placement and type of traffic control, warning devices and personnel shall be in accordance with VDOT's Work Area Protection Manual. Where one-way traffic is permitted, Contractor shall perform proper flagging for the duration of the project. The Contractor will notify the proper agency at least 48 hours before starting work. If traffic is impeded in any way, the same notice must be given to Fire Department, Rescue Squad, VDOT, Police Department, Sheriff, and School Board. All open trenches, pits, etc. shall be secured with barricades and any other necessary equipment to protect the public. The State of Virginia and Spotsylvania County shall not be liable for any damage resulting from construction.

3.2.3.10 Tracing Wire System for all Water and Sewer Mains

A. Provide Tracing Wire for all pressure mains, water and wastewater, regardless of material. Wire shall be #10, stranded, type THHN, thermoplastic insulated and nylon jacketed. Wire shall be color coded blue for water and green for sewer.

B. For subdivisions and long runs with multiple water meters, extend tracing wire along a water service and into a meter barrel approximately every 300 feet if possible.C. Wire Connectors

1. One connector: set screw pressure type for use with No. 10 stranded wire size. Holub Industries MA-2, Ideal Industries Model 30-222, or equivalent.

2. Two connector: C-Tap for two way splicing of tracer wire, for use with No. 10 stranded wire size. T&B #54705 or equivalent.

3. Three connector: split bolts, three wire type for splicing of tracer wire, for use with No. 10 stranded wire size. ILSCO Catalog #SEL-2S or equivalent.

D. Test Station Box: Plastic box for corrosion protection. Plastic shaft a minimum of 3" long with cast iron lid and collar. Collar shall be a minimum of 2" deep. Lid shall be bolted to collar with brass bolts. Lid shall be imprinted with the wording "TEST". Lid shall be color coded blue for water and green for sewer.

E. Electric Tape: Vinyl electric tape.

F. Electrical Coating: Scotchkote 3M electrical coating Part No. 054007 or equivalent.

G. Wire nut: Non-conductive for No. 10 stranded wire size.

H. Tracing Wire must be tested for continuity.

3.2.3.11 Marking Tape for all Water and Sewer mains

Provide Marking Tape for all pressure mains, water and wastewater, regardless of material. Tape shall be polyethylene tape with a metallic core, 2” in width, with appropriate continuous printed message. Tape shall be Catalog No. 2 WAT as manufactured by the Seton Name Plate Corp. or approved equivalent.

3.2.3.12 Disposal Of Waste Materials

A. Removal From Project Site: Remove waste materials, including unacceptable excavated material, trash, and debris and dispose of it legally off the project site.

B. Dust Control: Water, calcium chloride, or approved alternate shall be periodically applied to alleviate problems associated with dust.

C. Disposal of asbestos cement pipe shall be done in accordance with AWWA Manual 16, Work Practices for Asbestos Cement Pipe.

3.3 Sanitary Sewer Systems

3.3.1 General

3.3.1.1 Requirements Of Regulatory Agencies

Construction as shown on the approved plans or stated herein shall be performed in accordance with current and applicable requirements as established by the County of Spotsylvania and the VDH or any other agencies having jurisdiction. Where conflicts arise between the Contract Documents and previously mentioned requirements, the more restrictive shall apply. If such requirements require a change in the work as stated herein or shown on the plans, the Contractor shall stop work and notify the County for further direction.

3.3.2 Products

3.3.2.1 Sewer Pipe and Fittings

Only the following materials may be used unless otherwise approved by the Department of Utilities.

A. Polyvinyl chloride (PVC) non-pressure pipe (6”-15”) and fittings shall meet requirements of ASTM D3034, Type PSM-SDR-35 with elastomeric gasket joints meeting requirements of ASTM D3212.

B. Polyvinyl Chloride (PVC) non-pressure pipe (18” - 48”) and fittings shall meet requirements of ASTM F679, Table I Type SDR-35 for large diameter solid wall PVC pipe with elastomeric gasket joints meeting requirements of ASTM D3212. Bedding shall be as required by the County for plastic pipes as shown in the County’s Standard Details. Cell Classification for Sewer Pipe shall be 12454-B or 12364-C.

C. Polyvinyl Chloride (PVC) non-pressure pipe (21” and larger) shall meet requirements of ASTM F794, and fittings shall meet the requirements of ASTM 3034-35. PVC sewer pipe with elastomeric gasket joints shall meet requirements of ASTM D3212.

D. Molecularly Oriented Polyvinyl Chloride (PVCO) pressure pipe, (4” – 12”) will be allowed as an alternate to ductile iron pipe for sanitary force mains only. PVCO pipe shall meet the requirements of AWWA C909 with elastomeric gasket joints meeting the requirements of ASTM D3139. Joint restraint systems shall meet the requirements of UNI-B-13.

E. Ductile iron pipe shall meet requirements of AWWA C151. Pipe shall be Pressure Class 350 minimum or higher based on the requirements of the soil load, pressure, impact load, corrosion protection, or other needs identified by standard or by the Engineer. Pipe shall have lining and coating specifically designed for sanitary sewer service.

i. Mechanical joints and jointing materials shall meet requirements of AWWA/ANSI C111/A21.11.

ii. Push-on joint and rubber gasket shall meet requirements of AWWA C111.

iii. Exterior, bituminous coating for cast iron fittings and ductile iron pipe shall meet requirements of AWWA/ANSI C106/A21.6 or AWWA/ANSI C151/A21.51 as applicable.

3.3.2.2 Sanitary Sewer Manholes:

A. Manholes shall be constructed of precast reinforced concrete manhole sections in accordance with requirements of ASTM C478 and as shown on the Standard Details. Thermoplastic manholes will not be accepted unless specifically approved in writing by the Director of Utilities. All manholes shall be coated on the outside with a bitumen material Koppers Bistumastic No 300-M applied 2 coats min. 16 dry mils.

B. A maximum of two lift holes per manhole section may be provided.

C. Provide tongue and groove joints in manhole sections with a preformed groove in the tongue for placement of an O-ring type round, rubber gasket or approved alternate.

Gasket shall comply with requirements of ASTM C361.

Gasket shall provide the sole element in sealing the joint from either internal or external hydrostatic pressure.

D. Provide flexible pipe connections to manholes for pipes 21” in diameter and smaller in size. Materials shall consist of EPDM and elastomers designed to be resistant to water, sewage, acids, ozone, weathering, and aging. Use neoprene conforming to ASTM C443 and ASTM C923 and all stainless steel elements of the connector shall be totally non-magnetic Series 304 Stainless, excluding the worm screw for tightening the steel band around the pipe, which shall be Series 305 Stainless. The worm screw for tightening the steel band shall be torqued by a break-away torque wrench available from the precast manhole supplier, and set for 60 - 70 inch/lbs.

Cast or core drill openings in manholes to receive connectors. Connectors shall be suitable for field repair or replacements. Connectors not suitable for field replacement are unacceptable.

The assembled connectors shall allow at least an 11° angular deflection of the pipe and at least one inch of lateral misalignment in any direction and be suitable for a normal variation in diameter or roundness for the pipe material used.

E. As a general rule steps are not to be installed unless specifically called for. If steps are deemed necessary they shall be corrosion-resistant and shall be one-half inch grade 60-steel reinforcing rod encapsulated in a copolymer polypropylene. The steps shall conform with ASTM C478, paragraph 11 and to the dimensions shown on the Standard Details.

F. Manhole frames and covers shall be molded of gray cast iron conforming to ASTM A48, Class 30. Castings shall be coated with a coal tar pitch varnish, to which sufficient oil has been added to make a smooth coating, tough and tenacious when cold, but not tacky or brittle. Seating surfaces between frame and cover shall be machined. The dimensions and weights shall conform to the requirements shown on the Standard Details. The word "SEWER" shall be cast into the cover.

G. Sealant for manhole frames shall be a one-component polyurethane sealant similar to Sika "Sikaflex" type 430. Sealant for flexible pipe connections shall be a two-component polysulfide sealant similar to Sika "Sikaflex" type 412 with primer type 419.

H. Manhole frames shall be secured to the manhole with Heat Shrink Seal, Rapid Seal, or equivalent.

3.3.2.3 Sewage Air/Vacuum Valves

A. The sewage air/vacuum valve shall be designed to automatically exhaust large quantities of air during filling of a system. It shall also allow air to enter the pipe system when the line is being emptied. All this shall be accomplished through the functioning of a compound lever system in conjunction with a large and small orifice in one integral body casting.

B. This device shall have only orifices and no mechanical leverage, other than the weight of a stainless steel float ball.

C. It shall automatically provide for the escape of the air to the atmosphere without the loss of water when the float ball moves away from the orifice seal.

D. The body of the valve shall be cast iron and shall be coated with fusion-bonded epoxy, or teflon, or other approved coating to withstand moist, abrasive, and corrosive conditions.

E. Float with Buna-N seal shall be provided for positive seating.

F. Rigid stainless steel valve plug shall be provided to seal off the outlet orifice.

G. Wherever possible, valves shall have elongated bodies to minimize the problem of clogging by permitting the use of a long float stem. However, where height restrictions do not permit the use of the standard height valve, a short body valve can be applied.

H. Sizes 1” through 3” shall have N.P.T. inlets and outlets. Larger sizes shall have flanged inlets conforming to ANSI class 125 or 250 and shall have N.P.T. outlet as standard. Flanged outlet or protective hood shall be optional. It shall have a minimum of 3/32” outlet orifice for an operating pressure of 0-150 psi and 1/8” outlet orifice for an operating pressure range of 0-300 psi. All fittings shall be brass.

I. Valve shall be suitable for 300 psi working pressure at a minimum.

J. All flushing attachments shall be provided with each valve.

3.3.2.4 Sewage Combination Air Release Valves

A. Combination valves shall be designed to have the operating features of both air and vacuum valves and air release valves. It shall purge air from the system at start-up, vent small pockets of air while the system is pressurized and running, and prevent critical vacuum conditions during draining. They shall be installed at all the high points in the pipe line where air would naturally tend to rise during filling and collect during operation and/or where vacuum would tend to form when the system is drained.

B. The device shall have only orifices and no mechanical leverage, other than the weight of a stainless steel float ball.

C. The body of the valve shall be cast iron and shall be coated with fusion-bonded epoxy, Teflon, or approved coating to withstand moist, abrasive, and/or corrosive conditions.

D. Float with Buna-N seal shall be provided for positive seating.

E. Rigid stainless steel valve plug shall be provided to seal off the outlet orifice.

F. The combination valve shall be an integral unit manufactured and sold as a combination valve.

G. Sizes up to 3” shall have N.P.T. inlets and outlets. Larger sizes shall have flanged inlets conforming to ANSI class 125 or 250 and shall have N.P.T. outlet as standard. It shall have a minimum of 3/32” outlet orifice for an operating pressure of 0-150 psi and 1/8” or 1/16” outlet orifice for an operating pressure range of 151-300 psi.

H. Valve shall be suitable for 300 psi working pressure.

I. All flushing attachments shall be provided with each valve.

3.3.2.5 Sewage Air Release Valves

A. The sewage air release valve shall be designed to automatically exhaust small amounts of air accumulated at a system's high point. This shall be accomplished while the system is in service and under pressure. They shall be installed at high points in the system where air naturally tends to collect.

B. The device shall have only orifices and no mechanical leverage, other than the weight of a stainless steel float ball.

C. The body of the valve shall be cast iron with stainless steel trim and shall be coated with fusion-bonded epoxy, teflon, or approved coating to withstand moist, abrasive, and corrosive conditions.

D. Stainless steel float with Buna-N seal shall be provided for positive seating.

E. Sizes up to 3" shall have NPT inlets and outlets as per ANSI B2.1. Larger sizes shall have flanged inlet conforming to ANSI B16.1 class 125 as standard. It shall have a minimum of 3/16" orifice for an operating pressure of 0-150 psi and 1/8" outlet orifice for an operating pressure range of 151-300 psi. All fittings shall be brass.

F. Valve shall be suitable for a working pressure of 300 psi.

3.3.2.6 Sewage Plug Valves

A. All sewage plug valves shall be of the non-lubricated, eccentric type with resilient faced plug and round ports of no less than 90%, or rectangular ports of no less than 80%, of the connecting pipe area, except valves of 24" or larger size shall have port areas of no less than 70% of the connecting pipe area.

B. Valves shall be for buried underground service as well as plant service and shall be rated for 175 psi up to 12" and 150 psi for sizes 14" and larger. Drop-tight shut off shall be provided at full rated working pressure in the standard flow direction and 50 psi in the reverse direction, except when full-rated sealing is required in both directions.

C. Valves 6" and larger shall be equipped with geared actuators with a 2" square operating nut. Hand wheel and power actuated valves shall also include a 2" square operating nut for emergency operation.

D. All gearing shall be enclosed in a semi-steel housing and be suitable for running in a lubricant with seals provided on all shafts to prevent entry of dirt and water into the actuator. The actuator shaft and the quadrant shall be supported on permanently lubricated bronze bearings. Actuators shall clearly indicate valve position and an adjustable stop shall be provided to set closing torque and to provide seat adjustment to compensate for change in pressure differential or flow direction change. All exposed nuts, bolts, and washers shall be zinc plated.

E. Valves and gear actuators for buried or submerged service shall have seals on all shafts and gaskets on the valve and actuator covers to prevent the entry of water. Actuator mounting brackets for buried or submerged service shall be totally enclosed and shall have gasket seals. All exposed nuts, bolts, springs, and washers shall be stainless steel.

F. Valves shall open left (counterclockwise) and shall have mechanical joint end connections for buried service and flanged or Victaulic ends for non-buried service.

G. Valve bodies and all other cast iron parts shall conform in all respects to the American Society for Testing Materials' Standard Specifications of Gray Iron Castings, "ASTM Specification Designation A-126-Class B". The castings shall be clean and perfect without blow or sand holes or defects of any kind. No plugging or stopping of holes will be allowed.

H. Body ends shall be flanged with facing and drilling in accordance with ANSI B16.1, Class 125 or mechanical joint in accordance with AWWA Standard C-111 or ANSI A21.11. All mechanical joint end valves shall be furnished complete with joint accessories (bolts, nuts, gaskets, and glands).

I. Valve bodies shall be furnished with a raised seat surface completely covered with 90% pure nickel to ensure that the resilient plug face contacts only nickel, or a one-piece 304 stainless steel seat ring threaded to the body. The nickel seat must be welded to the valve body or the body seat ring to produce a metallurgical bond with interpenetration to the base metal with a bond strength equal to or greater than the valve body or seat ring material. The nickel or stainless steel seat must be machined to a finish of not more than 16 micro-inches to achieve minimal friction and wear to the resilient plug face during valve operation. Whether welded or screwed, the valve seat shall be designed to provide uniform contact with the resilient plug face and to prevent the plug face from contacting any cast iron surface. Resilient seats or seats attached to the body by screws or any other method not specified herein are not acceptable. Plated or sprayed nickel seats or epoxy seats are not acceptable.

J. Valve bodies shall be furnished with an adjustable closed position stop. The seat end and standard flow direction shall be cast onto the valve body.

K. Resilient faced plug/operating shaft shall be of a one piece design of ASTM A126 Class B cast iron with a seating surface eccentrically offset from the center of the plug shaft, and shall have a precision molded resilient facing of chloroprene (Neoprene), Buna-N (nitrile), or nitrile-butadiene (Hycar). With the valve in the open position, all surfaces of the plug/shaft shall be substantially out of the fluid flow path.

L. Valve shaft journal bearings shall be sleeve type, sintered, oil impregnated, permanently lubricated, type 316 ASTM A743 grade CF-8M or AISI type 317 L stainless steel, or phenolic backed Teflon. Thrust bearings shall be located in the

upper and lower journal areas and shall consist of stainless steel, Teflon, or a combination of those materials. Grit seals shall be provided in the upper and lower journals to prevent abrasive material from entering the bearing and seal areas.

M. Valve shaft seals shall conform to AWWA Standard C504-87, Section 3.7 and shall be of the bronze cartridge type utilizing O-rings, or the adjustable multiple V-ring type and shall be replaceable without disassembling the valve, while the valve is under system pressure.

N. Valve interiors and exteriors shall be coated according to AWWA Standard C550-90 with a two-component high build epoxy suitable for potable water service, with interior surfaces receiving 8 - 10 mils (dry film thickness) and exterior surfaces receiving 3 - 5 mils (dft) or 8 - 10 mils (dft) hand-applied epoxy coating. For buried or submerged service, 8 - 10 mils (dft) of asphalt varnish may be substituted for the exterior coating.

O. Valve testing shall be conducted per AWWA C504-87 Section 5 covering rubber seated butterfly valves. Each valve shall be performance tested per paragraph 5.2 assuring valve operation.

P. Body seat and shell leakage testing is to be conducted on each valve as per AWWA C504-87 paragraphs 5.3 and 5.4.

Q. Proof of design testing shall be conducted per AWWA C504-87 paragraph 5.5 and witnessed by a third party inspection agency. Certified copies of this report shall be available upon request.

3.3.3 Execution

3.3.3.1 Installation Of Sanitary Sewer Systems

A. Excavating and Backfilling and Bedding

1. Contractor shall remove any and all materials encountered in the course of excavating for all underground utility systems. After the pipe is in place, backfill with suitable material, free from frozen earth, rocks, organic materials, etc.

    a. Provide all necessary shoring required for the protection of excavations, existing utilities, and workmen and do all necessary pumping required to keep excavation and pipe free from water from any source at all times.

    b. Provide sufficient barricades, etc., adjacent to excavations to safeguard against injury to workmen and the public.

c. Where roots of live trees are encountered in excavations, they shall be carefully protected during construction.

d. Exercise special care in backfilling trenches to guard against disturbing the joints.

e. Remove and dispose of any material not used for backfill: Removal of subsurface obstructions, which are uncovered during excavation for installation of the sanitary sewer systems, shall be at the Contractor at his expense. This shall include removal of existing concrete or brick from existing building foundations, footings, abandoned utility piping, wires, structures, rock, boulders, etc., which may not be visible from surface investigations before construction but will interfere with new installations. If such obstructions are encountered, they shall be removed two feet from around the area of new work and the excavation backfilled with a suitable material as specified.

2. Bedding

a. Pipes up to and including eighteen inches (18”) in diameter, except ductile iron, shall be bedded in compacted granular material. Pipe shall be placed on compacted granular bedding having a minimum thickness of one-fourth (0.25) of the pipe’s outside diameter (4 inches minimum), and the granular bedding shall extend to the spring line of the pipe. Pipe bedding shall be VDOT size 8, 8P, or 9 per Section 203, Table II-3, having a maximum ½ inch particle size. Bedding for pipe larger than 18 inches and ductile iron pipe shall be designed on an individual basis and approved by the Director.

b. Only Class A, B, or C bedding (latest edition of the ASCE Manuals and Reports on Engineering Practice, WEF Manual of Practice) and AWWA class shall be permitted. The design engineer may require a different class of bedding in order to provide the strength necessary for the soil and load conditions encountered.

B. Pipe Handling:

1. Take all precautions to ensure that pipe and related items are not damaged in unloading, handling, and placing in trench. Examine each piece of material just prior to installation to determine that no damage has

occurred. Remove any damaged material from the site and replace with undamaged material.

2. Keep pipe clean. Exercise care to keep foreign material and dirt from entering pipe during storage, handling, and placing in trench. Flushing lines shall be required of the Contractor when directed to do so by the Inspector.

3. Survey Line and Grade:

   a. The Contractor shall maintain line and grade and provide the County with cut-sheets unless the County waives this requirement.

   b. Contractor shall have level or transit in good working order on the job set up at all times to periodically check line and grade of pipe.

4. Sewer Pipe Laying:

   a. Laying of sewer pipe shall be accomplished to line and grade as indicated on the County approved plans and in the trench only after it has been dewatered and the foundation and/or bedding has been prepared. Mud, silt, gravel, and other foreign material shall be kept out of the pipe and off the jointing surfaces.

   b. All pipe laid shall be retained in position so as to maintain alignment and joint closure until sufficient backfill has been completed to adequately hold the pipe in place. All pipes shall be laid to conform to the prescribed line and grade shown on the drawings. After completion the pipe shall exhibit a full circle of light at one manhole when viewed from the next.

   c. The sewer pipe shall be laid upgrade from point of connection to the existing sewer or from a designated starting point. If the starting point is at an existing stub, it shall be removed and a full length of pipe installed. The sewer pipe shall be installed with the bell end forward or upgrade. When pipe laying is not in progress the forward end of the pipe shall be kept tightly closed with a water- tight plug or cap. When the upstream end of a sewer does not terminate at a manhole, it shall be plugged and its location marked in a manner approved by the Inspector.

   d. The pipe shall be fitted and matched so that when installed it will form a smooth uniform invert.

   e. Prior to joining the pipe, all surfaces of the pipe to be joined and the surfaces of factory made jointing materials shall be clean and dry. Lubricants, primers, adhesives, etc., shall be applied and the pipes joined as recommended by the manufacturer’s specifications. Sufficient pressure shall be applied in making the joint to assure

that the pipe is "home". The interior of the pipe shall be cleaned of all foreign material as the work progresses. At the end of the work day, the last pipe laid shall be blocked to prevent creep, and closed with a water tight plug or cap.

f. Joining Pipe:

1) Ductile iron pipe is to be joined in accordance with the requirements of AWWA Standard C600 and the manufacturer's recommendations.

2) Polyvinyl chloride (PVC) pipe shall be joined in accordance with ASTM Standard D-2321 and the manufacturer's recommendations.

3) Other type pipe shall be joined in accordance with the manufacturer's recommendations and the requirements of the County approved plans and specifications.

g. All visible leaks shall be corrected prior to testing.

C. Manhole Installation:

1. The Contactor shall take all necessary precautions to keep any debris from being introduced into the manhole during installation.

2. Manholes shall be constructed to the elevations indicated on the County approved plans in accordance with the Standard Details.

a. Set manhole base section on bed of #57 stone with a minimum depth of 8". Stone shall be thoroughly compacted and carefully leveled to the excavated earth wall.

b. Join all manhole risers, cone top sections, and any other sections by the use of rubber gaskets.

c. Install pipe stubs in manholes where called for on the plans. All stubs shall extend beyond the manhole as reflected on the plans and shall be sealed with a watertight plug or cap.

d. Install flexible manhole connections for all pipes sizes 6" to 24", inclusive and apply sealant to completely fill joint between manhole barrel and flexible connection for the full thickness of the manhole barrel.

e. Plug lift holes from the outside with non-shrink grout and repair any defects in manhole.

f. Set adjusting rings in 301-Mastic Manhole frames shall be set in 1/4" bed of Ram Nek, Pioneer 310 Mastic, or approved joint sealer

g. In paved roadways or walkways, adjusting rings shall permit upward or downward adjustment of manhole frame. Maximum height of rings shall not exceed 12”.

h. Construct bench of concrete.

1) Elevation of bench at the channel shall be at the spring line of the lowest incoming pipe and the outgoing pipe.

2) Bench shall slope from the wall to the channel such that the bench at the channel is three inches lower than at the manhole wall.

3) Where stubs are provided for future pipe connections, bench and invert shall be so formed.

4) Use sulfide resistant cement for concrete or mortar on all acid-resistant manholes.

5) Where sealant is used, bench shall not be in contact with pipe or flexible pipe connection.

6) All inverts shall be formed and allow for smooth deflections. Where multiple inlets exist, form multiple inverts consistent with the diameter and position of each inlet. Smoothly transition the invert through the manhole to accommodate varying pipe sizes.

7) In drop manholes, bench to the invert of the drop pipe and transition the flow smoothly into the channel invert.

j. All visible and known leaks shall be corrected prior to testing.

D. Service Connections: The Contractor shall take all necessary precaution to keep any debris from being introduced into the service connection during installation. Place a tee-wye SCH 40 fitting with 4” outlet in the sewer where service connection is to be constructed. Lay 4” SCH 40 PVC or ductile iron pipe from the connection to the property line or easement boundary on a grade of not less than 1/4 in. per foot unless otherwise shown on plans. Pipe shall be bedded in stone 4” under pipe and to the spring line. Terminate service connection at the property line or easement boundary with an approved glue-on cap, and mark the end with 4” x 4” CCS pressure treated board installed plumb from bottom of 4” inch cap to 4 feet above ground. Service connection shall be of same type of pipe as sewer unless otherwise approved by County. When making a service connection to an

existing sewer, the Contractor shall use a mechanical hole-cutter and approved saddle or other approved fitting.

E. Existing Manhole Tie-In: The Contractor shall take all necessary precautions to prevent any debris from being introduced into the manhole or line during tie-in. Core drilling and a flexible pipe-to-manhole connector shall be used in the connection of the sewer pipe to precast manholes, where stubs do not exist.

The connector shall be Kor-N-Seal assembly or approved equivalent.

The connector shall be installed in the manhole wall by activating the expanding mechanism in strict accordance with the recommendation of the connector manufacturer.

The connector shall be of a size specifically designed for the pipe material and size being utilized on the project. All materials must conform to the approved products reflected in these standards.

3.3.3.2 Testing Of New Sanitary Sewer System (Non-Pressure)

A. Testing Technique for Sanitary Sewer System (Non-Pressure):

1. Sanitary sewer lines 42” in diameter and smaller shall be tested after backfill using a low-pressure air test in accordance with ASTM F1417, latest edition. Sewer lines larger than 42” in diameter shall be tested by infiltration/exfiltration test. All manholes shall be vacuum tested. All testing shall be conducted in the presence of the County’s Inspector. The Contractor shall provide all labor, materials, tools, and equipment necessary to make the tests. All equipment and methods used shall be acceptable to the County. All monitoring gauges shall be subject to calibration, if deemed necessary.

2. Low-Pressure Air Test (Sewer Pipe 42” and Smaller Diameter):

a. Summary of Method: Plug the section of the sewer line to be tested. Introduce low-pressure air into the plugged line. Use the quantity and rate of air loss to determine the acceptability of the section being tested.

b. Preparation of the Sewer Line: If required by County, flush and clean the sewer line prior to testing. Give special attention to laterals. Test will be conducted with laterals installed from the main to plugs for future connection. Plug all pipe outlets using approved pneumatic plugs with a sealing length equal to or greater than the diameter of the line to be tested. Prior to use, the pneumatic plugs must be tested by plugging both ends of a single joint of pipe. The plugs shall be pressurized to 25 psig (or other pressure defined by the pneumatic plug manufacturer and accepted

by the County prior to testing), then the pipe pressurized to 5 psig. The plugs must not move, and bracing is not allowed.

c. Ground Water Determination: If a line is located below the water table the elevation of the water table must be determined prior to testing. To determine the elevation of the water table the following procedure shall be utilized unless another procedure is approved by the Inspector. Install a ½ inch capped galvanized pipe nipple, approximately 12" long, through the manhole on top of the lowest sewer line in the manhole. Immediately prior to the line acceptance test, the ground water elevation shall be determined by removing the pipe cap and blowing air through the pipe nipple into the ground so as to clear it, and then connecting a clear plastic hose to the pipe nipple. The hose shall be held vertically and a measurement of the height in feet of water over the invert of the pipe shall be taken 30 seconds after the water has reached a steady level in the plastic hose.

d. Procedures: Determine the duration for the section under test by computation from the applicable formulas shown in ASTM F1417, latest edition. The pressure-holding time is based on an average holding pressure of 3 psi gage (a drop from 3.5 psi to 2.5 psi gage). The allowable leakage rate Q is 0.0015 cubic feet per minute per square foot of pipe area being tested.

Air Test: Minimum Time for 1 psig Drop

Pipe Diameter Inches	Minimum Time up to Length Shown Min:sec	Length for Minimum Time Feet	Minimum Time for Longer Length Seconds
4	3:46	597	0.380 L
6	5:40	397	0.854 L
8	7:34	298	1.520 L
10	9:26	239	2.374 L
12	11:20	199	3.418 L
15	14:10	159	5.342 L
18	17:00	133	7.692 L
21	19:50	114	10.470 L

24	22:40	99	13.674 L
27	25:30	88	17.306 L
30	28:20	80	21.366 L
33	31:10	72	25.852 L

The above values are extracted from Table 1, ASTM F1417 and are based on the equation:

$T = 0.085\ DK/Q$

Where: T = minimum time require for 1 psig pressure drop, seconds

D = measured pipe diameter, inches

Q = allowable leakage (0.0015 cfm/sf of internal surface)

K = 0.000419 DL (NOT LESS THAN 1)

L = length of tested section of pipe, feet

Lateral service lines are included in this test, and their effects shall be considered only if the tested section does not achieve the required minimum time. In that case, minimum time may be calculated by:

$T = [0.085\ K\ (D_1^2L_1 + D_2^2L_2 + \ldots D_n^2L_n)] / [(Q\ (D_1L_1 + D_2L_2 + \ldots D_nL_n)]$

Where variables are as above except:

D_n = nominal diameter of each pipe size being tested, inches

L_n = length of pipe in each diameter being tested, feet

$K = 0.000419\ (D_1L_1 + D_2L_2 + \ldots D_nL_n)$ not less than1

If the tested section meets the revised minimum time as calculated above, it shall be accepted.

Where the required minimum time exceeds 60 minutes, a pressure drop of 0.5 psig may be used as an alternate. The required minimum time for a 0.5 psig drop shall be half of the time required for the 1.0 psig drop as presented or as calculated above.

Determine the required test pressure. The test pressure shall be 3.5 psig unless the pipe to be tested is below the water table. If the pipe to be tested is submerged below the water table, the test pressure shall be increased by 1.0 psi for every 2.31 feet the ground water level is above the lowest invert of the tested section of the sewer.

Add air until the internal air pressure of the sewer line is raised to approximately 0.5 psi gage above the test pressure. After this internal pressure is obtained, allow time for the air pressure to stabilize. The pressure will normally show some drop until the temperature of the air in the test section stabilizes.

When the pressure has stabilized, and is at or above the starting test pressure of 3.5 psi as adjusted for water table elevation, commence the test. Before starting the test, the pressure may be allowed to drop to the starting gage pressure. Record the drop in pressure for the test period. If the pressure drops more than 1.0 psi gage during the test period, the line fails. The test may be discontinued when the prescribed test time has been completed even though the 1.0 psi gage drop has not occurred.

The test procedure may be performed prior to completing backfilling at the Contractor's option solely to identify leakage prior to backfilling, but must be performed after completion of backfilling. Acceptance shall be based only on testing completed after backfilling of the excavation.

e. Safety: The air test may be dangerous if, because of lack of understanding or carelessness, a line is improperly prepared.

As a safety precaution, pressurized equipment shall include a regulator or relief valve set at no more than 10 psi to avoid over-pressurizing and damaging an otherwise acceptable line. No one shall be allowed in the manholes during testing.

3. All manholes will be tested using the negative air pressure test (vacuum) in accordance with ASTM C1244, latest edition, for water tightness. Manholes will be visually inspected after backfilling. Contractor may backfill before testing with the understanding that any repairs will be made from the exterior of the manhole.

Manholes shall be vacuum tested and shall have 10" of mercury applied to the manhole and the time measured for the vacuum to drop from 10" to 9" of mercury. Minimum allowable test times for manhole acceptance at the specified vacuum drop.

Depth Of Manhole (Feet)	Manhole Diameter (Inches) Time (Seconds)		
	48”	60”	72”
10 or less	60	75	90
Greater than 10 but less than 15	75	90	105
Greater than 15 but less than 25	90	105	120
Over 25 feet – Time shown plus 2 seconds Per foot of depth greater than 25 feet	90	105	120

Test times for structures other than manholes will be based on the times for manholes of the nearest equivalent volume or as directed by the Inspector.

4. Test for leakage of gravity sewers (greater than 42” diameter) using either the infiltration or exfiltration test:

   a. Ground Water Determination: Use same procedure as “low pressure air test” above.

   b. Use infiltration test when ground water is 4 feet or higher above pipe crown along entire length of line to be tested. Plug the pipe at the upstream manhole. Install suitable measuring device at the downstream manhole. Measure the amount of water flowing through the outlet after flow has stabilized for a period of one (1) hour minimum. Test period shall be at least 15 minutes and not more than one (1) hour. The flow measuring device must be accurate within the flow rate expected for the test duration. Allowable leakage shall be 50 gallons per inch of pipe diameter per mile per 24 hours.

   c. Exfiltration test shall be accomplished by plugging the sewer at the downstream end and filling the upstream manhole with water to the top of the manhole. Test period shall be a minimum of two (2) hours. Allowable leakage shall be 50 gallons per inch of pipe diameter per mile per 24 hours.

3.3.3.3 Video Inspection of Sanitary Sewer Lines

1. Video Inspection by a National Association of Sewer Service Companies (NASSCO) certified entity is required for all new sewer mains and laterals. Laterals shall be installed and inspected by the Contractor who installs the sewer main from the main to either the cleanout at the served structure if service is provided concurrently with construction of

the new main, or to the cleanout at the property line or easement boundary if service will be provided at a later date.

2. Laterals not connected for service concurrently with the installation of the sewer main must video inspected at the time of construction. Lateral video inspections shall be completed from the service cleanout near the served structure to the sewer main, including passing through the cleanout at the property line or easement boundary. Lateral video inspections shall be conducted by the Contractor who installs the lateral from the property line to the structure.

3. Video recordings of inspections must be turned over to and reviewed by the Inspector prior to acceptance. Inspectors must be notified when video inspections are being conducted and may require their attendance.

4. Video inspection will be done one manhole section at a time. Flow in the section being inspected should normally be limited to the allowable leakage in the new main. Any flow will be suitably controlled.

5. The television camera used for the inspection shall be one specifically designed and constructed for such inspection. Lighting for the camera shall be suitable to allow a clear color picture of the entire periphery of the pipe. The camera shall be operative in 100% humidity conditions. The camera, television monitor, and other components of the video system shall be capable of producing picture quality to the satisfaction of the Inspector;

6. The camera shall be moved through the line in either direction at a moderate rate not exceeding 30 feet per minute, stopping when necessary to permit proper documentation of the sewer's condition. Manual winches, power winches, TV cable, and powered rewinds or other devices that do not obstruct the camera view or interfere with proper documentation of the sewer conditions shall be used to move the camera through the sewer line.

7. When manually operated winches are used to pull the television camera through the line, telephones or other suitable means of communication shall be set up between the two manholes of the section being inspected to ensure good communications between members of the crew.

8. The importance of accurate distance measurements is emphasized. Measurement for location of defects shall be above ground by means of a meter device. Marking on the cable, or the like, which would require interpolation for depth of manhole, will not be allowed. Accuracy of the distance meter shall be checked by use of a walking meter, roll-a-tape, or other suitable device and the accuracy shall be satisfactory to the County's Representative.

9. Documentation of the television results shall include:

    A. Television Inspection Logs: Printed location records shall be kept by the Contractor and will clearly show the location in relation to an adjacent manhole of

each infiltration point observed during inspection. In addition, other points of significance such as locations of lateral sewers, unusual conditions, and other discernible features will be recorded and a copy of such records will be supplied to the County.

B. Video Recordings: The purpose of video recording shall be to supply a visual and audio record of problem areas of the lines that may be replayed. Video recording playback shall be at the same speed that it was recorded. Slow motion or stop-motion playback features may be supplied at the option of the Contractor. The Contractor shall have all video recordings and necessary playback equipment readily accessible for review by the County during the project. All initial recordings and any re-inspections shall be supplied to and will become the property of the County on acceptance of the sewer main. Video recordings must be in a standard digital format (.avi, .mpeg, etc.) approved by the Department of Utilities. The Contractor may maintain a separate copy for his records.

3.3.3.4 Pressure Testing Requirements for Sewer Force Mains

Force main pressure testing shall conform to the requirements as established for water systems. See “Section 3.4.3.2” of this Design Standards Manual.

3.3.3.5 Tracing Wire and Locating Tape for Sewer Force Mains

All force mains shall have tracing wire and locating tape installed. A continuity test for tracing wires must be performed prior to acceptance.

The tracing wire shall be accessible for test hook-up at all test stations. The tracing wire must be completely insulated from ground. The tracing wire will be attached to the top of the pipe using duct tape at an interval no greater than 16 feet. Tracing wire within test stations shall be stripped ¾” from the end and capped with a wire nut to minimize electrical ground contact. All connections at the main line must be electrically sound and physically secure with screw connections or clamps. All connections must be taped with electrical tape and sealed with an electrical coating sealant. Test stations shall be installed at intervals on no greater than 1,000 feet along force mains. Tracing wire for force mains shall be color coded green.

Locating tape shall be installed in the trench approximately 12” below finish grade. Tape shall be polyethylene with metallic core, 2” in width, with continuous printed message “Caution - Force Main Buried Below". Tape shall be Catalog No. 2 WAT as manufactured by the Seton Name Plate Corp. or approved equivalent.

3.3.3.6 Clean-Up

Upon the completion of the installation of the sanitary sewer system and prior to the County acceptance, sediment and debris shall be removed from the system. The work area shall be restored to a condition equal to or better than its condition prior to construction and pavement replaced to the satisfaction of VDOT and/or the County. All trash and debris shall be removed and disposed of properly. Areas not otherwise stabilized shall be seeded and mulched and a good

stand of grass established.

3.4 Water Distribution System

3.4.1 General

3.4.1.1 Requirements Of Regulatory Agencies

Construction as shown on the plans or stated herein shall be performed in accordance with current and applicable requirements as established by the County of Spotsylvania and the VDH or any other agencies having jurisdiction. Where conflicts arise between the construction documents and previously mentioned requirements, the more restrictive shall apply. If such requirements require a change in the work as stated herein or shown on the plans, the Contractor shall stop work and notify the County immediately for further direction.

3.4.2 Products

3.4.2.1 General

All materials shall be new, virgin material. All brass, copper, and water meter materials must comply with the ANSI/NSF 61 Standard. Shop drawings, as defined in the General Section, and operation manuals are required on projects where there are special structures.

3.4.2.2 Water Pipe

A. Ductile iron pipe shall meet the requirements of AWWA C150 and AWWA C151. Pipe shall be, at a minimum, pressure class 350. Pipe shall have cement-mortar lining and a bituminous seal coat conforming to the requirement of AWWA C104. A minimum of 5% of the pipe furnished shall be gauged for roundness full length and so marked. Pressure class of pipe shall be increased if the specific installation warrants it.

   Pipe fittings shall meet the requirements of AWWA C110 or AWWA C153, pressure class 250. Fittings shall have a cement-mortar lining and a bituminous seal coating.

   Buried pipe and fittings shall have restrained, mechanical or push-on joints, all conforming to the requirements of AWWA C111. Bolts for mechanical joint fittings shall be high strength ductile iron having an ultimate tensile strength of 75,000 psi and a minimum yield point of 45,000 psi.

   Exposed (non-buried) pipe and fittings shall have flanged joints conforming to the requirements of AWWA C115. Bolts shall be high strength ductile iron having an ultimate tensile strength of 75,000 psi and a minimum yield point of 45,000 psi.

B. No other pipe material is accepted for water main installations for water mains 30” diameter and smaller unless specifically approved, in writing, by the Director of Utilities.

3.4.2.3 Gate Valves and Tapping Valves

A. Gate valves shall comply with AWWA Standard C500, latest revision, and the following:

1. All valves shall be manually operated, inside screw and yoke, equipped with operating nut, for installation in a vertical position, unless otherwise specified. They shall be iron body, bronze mounted, double disc with one of the resilient seat designs.

2. All valves shall open left (counter clockwise). Buried valves shall have mechanical joints while exposed valves shall have flanged joints. All joint surfaces of mechanical joint end gate valves, which will be in contact with the mechanical joint gasket, shall be fully machined to the dimensions and tolerances set forth in ANSI A21.11.

3. The bodies, bonnets and other cast iron parts shall conform in all respects to the American Society for Testing Materials' Standard Specifications for Gray Iron Castings, ASTM Specification Designation A-126, Class B for valve sizes 4" through 24" and A-126, Class C for valve sizes 30" through 48". The castings shall be clean and perfect without blow or sand holes or defects of any kind. No plugging or stopping of holes will be allowed.

4. All valves shall have either a bronze stem collar bushing with two O-rings above the stem collar or a stem collar with one O-ring below and one O-ring above the stem collar, with the stem collar being completely sealed in a permanent grease reservoir.

5. All other materials not specified shall meet AWWA C500, latest edition.

6. Valves 4" through 12" must have a 200 psi working and 400 psi test pressure. Valves 14" and larger must have 150 psi working and 300 psi test pressure.

8. All valves shall be manufactured to allow removal of seal plate under pressure in either an open or closed position.

9. If the standard valve provided by a manufacturer does not fully comply with these specifications, but compliance can be attained by providing optional features, then each valve must be permanently marked to indicate the option or options that have been provided. The method of marking valves indicating the options must be approved by the County.

10. Stainless Steel bolts are required for all valves. Bolts shall be grade 8 with grade 10 nuts.

B. Tapping Valves:

1. Tapping valves shall meet above specifications as referenced in A. above except, the body seat rings shall have a clear inside opening sufficient to pass a cutter of full diameter and equal to the nominal size of the valve. The outlet end shall be suitable for use with the type of pipe being utilized.

2. Tapping valves will be suitable for use with all approved manufactured tapping sleeves without modification.

C. Resilient Seat Gate Valves (6” – 12”):

1. All resilient seat gate valves 6”-12” in size shall comply with AWWA C-509, latest revision.

2. All valves shall be manually operated non-rising stem, equipped with operating nut, for installation in a vertical position, unless otherwise specified, and the valve body shall be ductile iron with reinforced flanges.

3. All iron surfaces, internal and external, must be coated with a minimum 8 mils thickness of hand applied epoxy or 3-5 mils thickness fusion bonded epoxy.

4. The valve stem shall have an independent stem nut (not rigidly attached to the gate), which allows the gate to flex without stressing the stem.

5. All valves shall have either a bronze stem collar bushing with two O-rings above the stem or a stem collar with one O-ring below and one O-ring above the stem collar.

6. Seating shall use compression closure. The gate shall be of a true bi-directional, mirror image design.

7. Valves shall have a smooth bottom design.

8. All valves shall open left (counter-clockwise). Buried valves shall have mechanical joints while exposed valves shall have flanged joints.

9. The bodies, bonnets, and other ductile iron parts shall conform in all respects to the American Society for Testing Materials’ Standard Specifications of Gray Iron Castings, “ASTM Specification Designation A-126, Class B for valve sizes 6” through 12”.” The castings shall be clean and perfect without blow or sand holes or defects of any kind. No plugging or stopping of holes will be allowed.

10. Valves 6” through 12” must have a 200 psi working and 400 psi test pressure.

11. If the standard valve provided by a manufacturer does not fully comply with these specifications, but compliance can be attained by providing optional features, then each valve must be permanently marked to indicate

the option or options that have been provided. The method of marking valves to indicate that options are included must be approved by the County.

3.4.2.4 Butterfly Valves (16" - 72")

All butterfly valves shall conform to the latest revision of AWWA Standard C-504, Class 150-B unless otherwise indicated and meet the following:

A. Valve bodies shall be cast iron, ASTM A-126 Class B or ductile iron per ASTM A-536 grade 65-45-12. Body ends shall be flanged with facing and drilling in accordance with ANSI B16.1, Class 125 or mechanical joint in accordance with AWWA Standard C-111 or ANSI A21.11. All mechanical joint end valves shall be furnished complete with joint accessories (bolts, nuts, gaskets, and glands), and be for underground use only. All valves shall conform to AWWA C-504, "Table 3, Laying Lengths For Flanged Valves and Minimum Body Shell Thickness for all Body Types".

B. Valve disc shall be cast iron, ASTM A-126 Class B or ductile iron ASTM A-536, grade 65-45-12. Valve disc shall be of the offset or symmetrical design providing 360 degree uninterrupted seating, and for sizes 30" and larger shall be of the flow through type, cored, or domed.

C. The resilient seat shall be natural rubber or BUNA-N located on the disc or the body retained by an epoxy backing ring or 18-8, Type 304 stainless steel retaining ring secured to the disc by 18-8, Type 304 stainless steel screws. The seat shall be capable of mechanical adjustment in the field and field replaceable without the need for special tools on 24" and larger valves. Valve body seat shall be 18-8, Type 304 Stainless Steel.

D. Valve shaft shall be 18-8, Type 304 stainless steel. Valves shall have either one piece (through shaft) or two piece (stub shaft). The shaft should be attached to the disc by means of O-ring sealed taper pins with lock nuts on 30" and larger valves. Taper pins should be either 304S.S or 416S.S heat treated for added strength or shaft is attached with stainless steel shaft journals hex mated to drive shaft.

E. The valve assembly shall be furnished with a non-adjustable factory set thrust bearing designed to center the valve disc at all times.

F. Shaft bearing shall be contained in the integral hubs of the valve body and shall be of non-cold flowing phenolic backed, PTFE or corrosion resistant self-lubricated sleeve type.

G. Valve shaft seal shall consist of O-rings or Split-V ring. Where the valve shaft projects through the valve body for the actuator connection, the O-ring or Split-V ring packing seal shall be field replaceable as a part of a removable bronze cartridge, without valve disassembly. Connection to the actuator shall be provided

by means of at least 2 bolts for 16” - 24” valves and at least 4 bolts for 30” and larger valves.

H. Valves shall open counter-clockwise.

I. When required, manual actuators shall be amply sized for line conditions. All manual actuators should be traveling nut or worm gear type. All 16” through 24” butterfly valve manual actuators shall be capable of withstanding 300-450 foot pounds of input torque against the open or closed stops. All actuators shall have adjustable mechanical stop limits. The closed position stop may or may not be externally adjustable.

J. All valves shall be coated with AWWA Standard Epoxy Coatings or asphalt varnish equal, in conformance to AWWA Standard C-550 or C-450, latest revision. All interior ferrous surfaces, including disc, shall be coated a nominal 10 mils thick for long life and body exterior shall have a minimum 8 mils thickness of hand applied epoxy or 3-5 mils thickness fusion-bonded epoxy coating in order to provide protection in shipment and storage, and to afford a superior base for field-applied finish coats.

3.4.2.5 Tapping Sleeves

3.4.2.5.1 Stainless Steel Tapping Sleeves

A. The body of the tapping sleeve shall be of 18-8 type 304 stainless steel.

B. Flange to be ductile iron, carbon steel or 304 stainless steel, 150 lb. drilling.

C. Gaskets shall be Grade 60 compounded for use with water, alkalis, mild acids, and most hydro-carbon fluids, up to 212° F.

D. Clamping hardware (nuts, bolts, and washers) shall be 18-8 type 304 stainless steel, with plastic anti-gall washers. Drop-in bolts or welded-on studs are acceptable.

E. Application: Any approved taps on PVC or ductile iron water main, matching size or one nominal size smaller than tapped main.

3.4.2.5.2 Ductile Iron Tapping Sleeves

A. The body and glands of the tapping sleeve shall be of ASTM-126, ductile iron. Sleeve shall be furnished complete with all mechanical joint accessories (bolts, nuts, gaskets, and glands), and shall have a epoxy coating.

B. Valve flange, body gaskets, and clamping hardware (bolts, nuts, and washers) shall be as specified for the fabricated steel tapping sleeve.

C. Application: Any approved taps on PVC or ductile iron water main, matching size or one nominal size smaller than tapped main.

3.4.2.6 Double Check Assembly

Double check assemblies and other fire protection devices are governed by "Article 2 – Fire Regulations" of the Spotsylvania County Design Standards Manual.

3.4.2.7 Fire Hydrants

A. Fire hydrants shall be manufactured in full compliance with this specification and shall also comply with the AWWA Fire Hydrant Specification C-502, latest revision and the following:

1. Type: Compression - Dry Standpipe: Valve shall open against and close with the pressure. The design shall be such that all internal operating parts can be removed through the standpipe and main valve rod extended without excavating.

2. Size: Internal valve diameter shall be a minimum 5½".

3. Inlet Size and Type: 6" mechanical joint end with accessories.

4. Hose Nozzles: Each hydrant shall be equipped with two 2½" I.D. hose nozzles with National Standard threads, one-quarter turn bayonet lock or threaded in with O-ring seal and suitable locking arrangement.

5. Steamer Nozzle: Each hydrant shall be equipped with one 4½" Steamer Nozzle having National Standard Threads, one quarter turn bayonet lock, or threaded in with O-ring seal, and suitable locking arrangement.

6. Direction of open: Left, counter – clockwise. Standpipe - Ground line Safety Construction: The standpipe sections shall be Direction of Open: Left, counter-clockwise.

7. Size and Shape of Operating Nut and Cap Nuts: to be 1½" point to flat pentagon. Each hydrant shall be equipped with a weather cap.

8. Seal Plate: The hydrant shall be so constructed that a moisture-proof lubricant chamber is provided which encloses the operating threads, thereby automatically lubricating the threads each time the hydrant is operated. The lubricant chamber shall be enclosed with at least three O-rings. The two lower O-rings will serve as pressure seals; the third O-ring will serve as a combined dirt and moisture seal to prevent foreign matter from entering the lubricant chamber. The hydrant shall be equipped with either an anti-friction washer or bronze bushing to reduce operating torque. The bonnet will be secured to the hydrant using bolts and nuts.

9. Base-ground line safety construction: The standpipe section shall be connected at the ground line by a two part, bolted safety flange or breakable lugs. The main valve rod sections shall be connected at the ground line by a frangible coupling. The standpipe and ground line safety construction shall be such that the hydrant nozzles can be rotated to any desired position without disassembling and removing the top operating components and the top section of the standpipe. The minimum inside diameter of the barrel shall be 6".

10. Main Valve, Stem Assembly: The main valve rod assembly shall be so constructed to allow removal of all operating parts through the barrel regardless of depth of bury, using a removal wrench which does not extend below the ground line of the hydrant. The main valve seat ring shall be bronze and its assembly into the hydrant shall involve bronze-to-bronze thread engagement, and the valve assembly pressure seals shall be obtained without the employment of torque-compressed gaskets. The design of the main valve rod shall be such that the operating threads at the top of the rod and the valve assembly threads at the bottom of the stem are isolated from contact with water in the standpipe or in the hydrant inlet shoe.

11. Drain Valve: The operation of the drain mechanism shall be correlated with the operation of the main valve and shall involve a momentary flushing of the drain ports each time the hydrant is opened. The drain ports shall be fully closed when the hydrant valve is more than 2½ turns open and the drainage channel in the bronze valve seat ring shall connect to two or more outlet drain ports. No springs may be employed in the hydrant valve or drain valve mechanism. The drain valve will be protected with at least ½ yard # 57 stone protected with filter cloth.

12. Depth of Bury: Normally hydrants shall be suitable for installation in trenches 4-1/2' deep. Required parts and materials to adjust fire hydrants to different depth of bury shall be provided by the manufacturer to meet actual field conditions.

13. Painting Instruction: Two prime coats and one Rustoleum Safety Red # 7564 finish coat shall be used, unless otherwise specified. Exposed area of fire hydrant shall receive one field coat of Rustoleum Safety Red # 7564 after installation. The wetted surface of the hydrant shoe shall be epoxy coated to prevent corrosion of the waterway. A coat of reflective 3M Scotchlite 7210 Silver paint is required around the bonnet.

14. Pressure Rating: Test pressure 300 psi, working pressure 150 psi.

B. If the standard hydrant provided by a manufacturer does not fully comply with these specifications, but compliance can be attained by providing optional features, then each hydrant must be permanently marked to indicate the option or

options that have been provided. The method of marking hydrants to indicate that options are included must be approved by the Inspector.

3.4.2.8 Check Valves

Check valves shall be of the horizontal swing type, iron body bronze mounted, equipped with weighted lever or spring as specified or shown on the plans.

3.4.2.9 Water Service Assembly for 5/8" Water Meters

All materials for the installation of water services shall be as follows or approved equal:

A. Water meter barrel shall be PVC solid fabricated barrel 18" I.D. by 30" height with access notches for piping. For traffic areas reinforced barrels shall be used.

B. The meter barrel lid shall bex-325 Ford or equivalent, a round cast iron, one piece cover designed to fit the corresponding opening on the meter barrel and have a square tread plate surface design. Meter box lids shall have a 1-3/4" diameter hole located in its center. The hole shall either be cast in place at the foundry or, after casting, be retrofitted via a plasma arc torch or hole saw. Holes shall be compatible with the County's touch read meter system.

C. The meter barrel lid shall have a lift bar will be solid to the bottom of the pocket with a 1/2" top width and a 3/16" bottom width forming a hook ledge for ease of removal with a lifting tool. There shall be a 3/8" notch on the outer edge directly in line with the lift bar. The cover shall have a guide ring on the underside 1/2" by 11" O.D. and have a total weight of less than 10 lbs. The cover must be a Mid-States Plastics, Inc. Model # MSC-1258L or approved equivalent.

D. Meter yokes shall be 5/8" x 3/4" Ford 5020 or Mueller 502 or approved equivalent. Expanders shall be Ford EC23 or approved equivalent with epoxy coating.

E. Provide corporation stop with corporation cock thread inlet.

F. Pipe shall be 1" or 3/4" type "K" copper domestic manufactured pipe.

G. Delete section.

H. Service Saddles:

1. All saddle castings must be ductile iron and meet the requirements of ASTM A-536-80, protected with corrosion resistant paint or epoxy coating.

2. All saddles must have a minimum of two (2) 1 1/2" wide (including bolts) stainless steel straps type 304 (18-8) where welds are passivity for

resistance to corrosion. Exception: Ford FS202, which has two (2) bolts and a single strap with a minimum width of 3 1/4".

3. Gaskets must be made of virgin NBR compound.

4. Service saddles are required on all taps made onto PVC pipe other than C-900 6" and larger and all taps made on ductile iron pressure class 350 pipe smaller than 6". The maximum direct tap on 6" and 8" pressure class 350 ductile iron is 1" and 1.25" for 12"

3.4.2.10 Water Service Setter for 1", 1-1/2" and 2" Water Meters

All materials for the installation of water services shall be as follows or approved equal:

A. General: All 1-1/2" and 2" meter setters shall be constructed of seamless threaded red brass pipe, standard Type K hard copper tube (per ASTM B-88-62), high quality brass (per AWWA C-800,) and leadless solder and provide horizontal female pipe threads on both front and rear connections. Setters must include a valved bypass for meter maintenance, except for irrigation and residential meters.

Meter setters for 1" meters shall be 1" x 12" riser meter yokes with copper tube or compression on the inlet and outlet sides.

Meters are supplied by Spotsylvania County and installed by Utility Staff.

B. Bypass: Meter setters shall have an appropriately sized bypass line with an inverted key or ball-type stop threaded directly into the inlet bypass tee fitting. This bypass valve shall have a solid tee head and be either lock wing type or provide a bracket or other device to lock this valve in the "off" position upon installation. If copper tube is used for the bypass line, the compression connection for the copper side of the bypass valve must be as produced by the following manufacturers:

Mueller Co., "110" compression connection for copper pipe; or

Ford Meter Box Co., "Pack Joint" connection for copper pipe; or

A.Y. McDonald, "T" compression connection for copper pipe.

Otherwise, a tee head inverted plug or ball type bypass valve is required with a threaded connection. Both of the bypass tee fittings, (inlet and outlet,) shall have brace pipe eyelets cast within them to stabilize setter upon installation.

C. Angle Valves: Flanged, inverted key, or ball-type "tee head" angle valves are required on both meter connections, and will include lock wings and meter support bracket to aid in meter installation. Pack joint or compression connections with check valve are allowed on the vertical riser pipe; these connections must be threaded or soldered copper. Valves shall be double drilled, (2" size only) to accommodate both 1 1/2" and 2" meters. Angle or ball valves shall provide a stop

or check to limit movement of tee head at 90° Maximum, (from fully open to completely off). Arrows cast within the inlet valve shall indicate direction of flow while in service.

D. Dimensions: Meter setters shall accommodate the following meter dimensions:

1” male x male pipe thread laying length: 10 3/4”± 1/16”

1-1/2” flanged meter laying length: 13 ¼ ”, includes gasket

2” flanged meter laying length: 17 ¼ ” ”, includes gasket

The rise or height of meter setter, measured vertically from center line of inlet pipe thread to center line of meter flange bolt, shall be:

1” meter setter, maximum height of 12”

1-1/2” meter setter, maximum height of 8 1/2”

2” meter setter, maximum height of 9 1/2”

The copper used on the bypass and vertical riser pipe, (if so equipped,) shall be Type K and comply with ASTM B-88-62, which states outside diameters as shown here:

3/4” nominal pipe size, .875” outside diameter, .065” wall

1” nominal pipe size, 1.13” outside diameter, .065” wall

1-1/2” nominal size pipe, 1.63” outside diameter, .072” wall

2” nominal size pipe, 2.13” outside diameter, .083” wall

The bypass assembly shall be sized as follows:

1” meter setter requires minimum 3/4”

1-1/2” meter setter requires minimum 1” bypass pipe & valve

2” meter setter requires minimum 1” bypass pipe & valve

E. Meter boxes for 1”, 1-1/2” and 2” meters shall be as shown in the standard details. 5/8” to 3/4” meter- - 18”x 30 “ meter barrel, 1” meter 24’ x 30”- - meter barrel, 1 ½” meter 30”x 30”- - meter barrel, 2’ meter- - 36” x 30” barrel.

F. Backflow prevention devices are not to be used at yokes.

G. Service saddles are required on all taps made into PVC pipe other than C-900 6” and larger and all taps made into ductile iron pressure class 350 pipe smaller than

6”. The maximum direct tap in 6” and 8” pressure class ductile iron is 1” and 1.25” for 12”.

3.4.2.11 Valve Boxes

All underground valves shall be installed in approved cast iron valve boxes, having suitable base and shaft sections, and covers to protect the valve and permit easy access and operation. Valve box assemblies shall be adjustable using a slip type system. Install a 2’ x 2’ x 6” concrete collar around all valve boxes not in pavement. Extend valve operator nuts to within 18 “ of final grade.

3.4.2.12 Air Release Valves

A. Type 1: Small orifice valves shall be either of the a) kinetic design type employing only one moving part, a stainless steel float ball or b) of the stainless steel float and lever type. It shall maintain the closed position to prevent the loss of water by positive seating of the float ball against a smoothly ground contact surface of the exhaust orifice.

It shall automatically provide for the escape of air to atmosphere without the loss of water when the float ball moves away from the orifice seat. The body of the valve shall be cast iron and shall be coated to withstand a moist environment.

Air release valves shall have a minimum of a 1” N.P.T. inlet for 6”, 8”, and 12” pipe sizes and a 2” N.P.T. inlet for pipes 16” and larger, and shall have a minimum of a 3/32” outlet orifice for 6”, 8”, and 12” pipe sizes and a 3/16” outlet orifice with 16” and larger pipes.

Air release valves shall be suitable for 150 psi working pressure at a minimum.

Air release valves for sewage force mains shall be specifically designed for sewage applications.

All flushing attachments shall be provided with air release valves.

B. Type 2: Shall be a combination, dual unit valve, combining one (1) small and one (1) large unit, both employing the kinetic operating principal or of the stainless steel and lever type. For the Kinetic type, the only moving parts shall be two (2) stainless steel balls (one for each unit) which will remain in the respective throat areas when discharging air without blowing shut or collapsing the float ball(s).

In the closed position, resulting from water filled line, the valve shall prevent leakage.

The large orifice seat shall be of composition material and replaceable.

The body of the valve shall be cast iron and shall be coated to withstand moist environment.

Air release valve size shall be 6" with a 3/8" orifice for the small unit and shall be suitable for 150 psi working pressure. The larger orifice shall be sized based on the specific application based on the manufacturer's recommendation.

3.4.2.13 Valve Manholes

Valve manholes shall be concrete meeting the requirements of ASTM C-478. Diameters shall be as shown on plans, but in no case shall they be less than 4 feet in inside diameter. Manhole frame and covers meeting the requirements for sanitary manhole frame and covers shall be utilized except that the covers shall have the word "WATER" cast on them.

3.4.2.14 Joint Restraint Systems

Thrust protection as shown on plans in the standard details shall consist of pipe joints, fittings, and appurtenances specially designed for thrust restraint of ductile iron pipe. Thrust blocks are prohibited except where pipe restraint cannot be achieved using restrained pipe joints, fittings, and appurtenances.

All restraint devices must be U.L. listed and F.M. approved.

Mechanical joint restraint shall be incorporated in the design of the follower gland and shall include a restraining mechanism which, when actuated, imparts multiple wedging action against the pipe, increasing its resistance as the pressure increases. Flexibility and minimal deflection of the joint shall be maintained after burial. Glands shall be manufactured of ductile iron conforming to ASTM A536-80. Twist-off nuts shall be used to ensure proper actuating of the restraining devices.

Restraining devices shall be of ductile iron, heat-treated to a minimum hardness of 370 BHN. There shall be no dissimilar metals allowed. Dimensions of the gland shall be such that it can be used with all AWWA approved standardized mechanical joint bell and tee-head bolts conforming to ANSI/AWWA A21.11 and ANSI/AWWA C153.53/A21.53 of latest revision. The mechanical joint restraint device shall have a working pressure of at least twice the working pressure of the pipe.

All existing bell and spigot end joints within the length of required restrained joint pipe shall be restrained with a clamping ring and an additional ring designed to fit behind the bell end of the ductile iron pipe. The rings shall be connected with T-head bolts or rods. Rods must be protected from corrosion either by rod material or coating.

3.4.2.15 Cast Couplings

Center Sleeve: Made of ductile iron, Spec ASTM-A536, and coated with an enamel shop coat, sized to accommodate all AWWA pipes of the same nominal size.

End Ring: Made of ductile iron Spec ASTM-A536, and color coded with an enamel shop coat to

easily identify its use on various types of pipe.

Gaskets: SBR rubber compound, Grade 30 per Spec ASTM D-2000 for normal water service and an extended shelf life.

Bolts: High strength low alloy steel bolts with heavy hex nuts, per AWWA C-111.

3.4.2.16 Casing Spacers

Casing Spacers shall be bolt on style with a shell made in two sections of heavy T-304 stainless steel. Connecting flanges shall be ribbed for extra strength. The shell shall be lined with a PVC liner .090" thick with 85-90 durometer or neoprene rubber. All nuts and bolts are to be 18-8 stainless steel. Runners shall be made of ultra-high molecular weight polymer (UHMW) or glass reinforced plaster. Runners shall be supported by risers made of heavy T-304 stainless steel or 10 gauge welded steel. The supports shall be mig welded to the shell, and all welds shall be passivated or 3/8" diameter stud welded to band and locked with a locking fastener. The height of the supports and runners combined shall be sufficient to keep the carrier pipe at least .75" from the casing pipe wall at all times.

3.4.3 Execution

3.4.3.1 Installation Of New Water Systems

A. Excavating and Backfilling:

1. Contractor shall take care and provide all necessary precautions during the course of excavating for all underground utility systems. After the pipe is in place, backfill with suitable earth, free from rocks and other unacceptable materials.

    a. Provide all necessary shoring required for the protection of excavations, existing utilities, and workmen and do all necessary pumping required to keep excavation and pipe free of water from any source at all times.

    b. Provide sufficient barricades, fencing , or other protective devices adjacent to excavations to safeguard against injury to workmen and the public. Provide and maintain sufficient warning at walks, roadways, and parking areas to provide safety at all times.

    c. Where roots of live trees are encountered in excavations, they shall be carefully protected during construction.

    d. Exercise special care in backfilling trenches to guard against disturbing the pipe joints.

    e. Remove and dispose of any excess and/or unacceptable material.

2. Subsurface obstructions, which are uncovered during excavation for installation of the water systems, shall be removed by the Contractor at his expense. This shall include removal of existing concrete or brick of existing building foundations, footings, abandoned utility piping, wires, structures, rock, boulders, etc., which may not be visible from surface investigations before construction, but will interfere with new installations. If such obstructions are encountered they shall be removed two feet from around the area of new facility and the trench backfilled with a suitable material as specified.

B. Pipe Installation:

1. Take all precautions to ensure that pipe and related items are not damaged in unloading, handling, and placing in trench. Examine each piece of material just prior to installation to determine that no damage has occurred. Remove any damaged material from the site and replace with undamaged materials.

2. Keep pipe clean. Exercise care to keep foreign material and dirt from entering pipe during storage, handling, and placing in trench. Plug or cap the pipe with a suitable waterproof fitting at the end of each day.

3. Do not lay pipe when weather or trench conditions are unsuitable.

4. Water Pipe Laying:

a. Laying of water pipe shall be accomplished only after the trench has been dewatered and the foundation and/or bedding has been prepared. Mud, silt, gravel, and other foreign material shall be kept out of the pipe and off the jointing surfaces.

b. All pipe laid shall be retained in position so as to maintain alignment and joint closure until sufficient backfill has been completed to adequately hold the pipe in place. All pipe shall be laid to conform to the prescribed line and grade shown on the plans and shall include digging out for bell ends.

c. Water pipe runs intended to be laid straight shall be so laid. Deflection from a straight line may be made by deflecting the joints only when permission has been given by the County. Joint deflection in pipe shall not exceed one-half that recommended by AWWA Standards or the manufacturer whichever is less. Changes in grade or alignment, which cannot be made by deflecting pipe joints shall be made by use of proper bends, offsets or special fittings as required.

d. The water pipe, unless otherwise approved by the Inspector, shall be laid up grade from point of connection of the existing water line

or from a designated starting point. Water pipe shall be installed with the bell end forward or upgrade. When pipe laying is not in progress, the forward end of the pipe shall be kept tightly closed with a water tight plug or cap; plywood or plastic is not acceptable.

e. The pipe shall be fitted and matched so that when laid in the work, units will form a smooth, uniform invert.

f. Prior to joining the pipe, all surfaces of the pipe to be joined and the surfaces of factory made jointing materials shall be clean and dry. Lubricants, primers, adhesives, etc., shall be applied and the pipes joined as recommended by the manufacturer's specifications. Sufficient pressure shall be applied in making the joint to assure that the pipe is "home". The interior of the pipe shall be cleaned of all foreign material as the work progresses. At the end of the workday, the last pipe laid shall be blocked to prevent creep and closed with a watertight plug or cap.

g. Joining Pipe:

1) Ductile iron pipe to be joined as follows:

(a) Mechanical joint pipe:

(1) When installing PVC pipe into M.J. fittings, the beveled end of the pipe must be cut off to allow for maximum insertion depth and sealing area to avoid leaks. Thoroughly clean inside of the bell and 8" of the outside of the spigot end of the joining pipe to remove oil, grit, excess coating, and other foreign matter from the joint. Paint the bell and spigot with soap solution (half cup granulated soap dissolved in 1 gallon water). Slip ductile iron gland on spigot end with lip extension of gland toward end of pipe. Paint rubber gasket with or dip into the soap solution and place on the spigot end with thick edge toward the gland.

(2) Push the spigot end forward to seat in the bell. Then carefully press the gasket into the bell so that it is located evenly around the joint. The gland is moved into position, bolts inserted and nuts turned finger tight. Tighten all nuts to torque listed below:

Bolt Size	Torque

(inches)	(ft - lbs)
5/8	50 -60
3/4	85-90
1	90 - 100
1 - 1/4	90 - 120

(3) Tighten nuts on alternate sides of the gland until pressure on the gland is equally distributed and torque value is reached.

(4) Permissible deflection in mechanical joint pipe shall not be greater than one-half of that listed in AWWA C600.

(b) Push-on joint ductile iron pipe

(1) Thoroughly clean inside of the bell and 8” of the outside of the spigot end of the joining pipe to remove oil, grit, excess coating, and other foreign matter. Flex rubber gasket and insert in the gasket recess of the bell socket. Apply a thin film of gasket lubricant, supplied by pipe manufacturer, to the gasket and spigot end of the joining pipe.

(2) Start spigot end of pipe into socket with care. The joint shall then be completed by forcing the plain end to the bottom of the socket with a forked tool or jack type device. Field cut pipe shall have the end filed to match the manufactured spigot end.

(3) Permissible deflection in push-on joint pipe shall not be greater than one-half of that listed in AWWA C600.

h. Tracing wire shall be accessible for test hook-up at all fire hydrants and test stations. The tracing wire must be continuous and completely insulated from ground. The tracing wire will be attached to the top of the pipe using duct tape at an interval no greater than 16 feet. Tracing wire within test stations and hydrants shall be stripped ¾” from the end and capped with a wire nut to minimize electrical ground contact. Test stations shall be installed within 2 feet of all fire hydrants and at intervals no greater than 1000 feet. All connections at the main line must be electrically

sound and physically secure with screw connections or clamps. All connections must be taped with electrical tape and sealed with an electrical coating sealant. Tracing wire for waterlines shall be color coded blue.

i. Place underground warning tape directly above all water mains, 12" below finished grade. Tape shall be polyethylene tape with a metallic core, 2" in width, with the continuous printed message "Caution - Waterline Buried Below." Tape shall be Catalog No. 2 WAT as manufactured by the Seton Name Plate Corp. or approved equivalent.

C. Installation of Valves, Fittings, and Hydrants:

1. General: Valves, fittings, and hydrants shall be set and joined to the piping system as specified for cleaning, laying, and joining pipe.

2. Valves and Valve Boxes: Cast iron valve boxes shall be firmly supported, centered, and plumb over the operating unit of valve. Box cover shall be set flush with the surface of finished pavement or at such other level as may be directed by the Inspector. Valve rod extension with guide shall be required to maintain a maximum distance of 2'-4" from operating nut to top of box. All valves shall be properly restrained.

3. Cross Connections: Drainage branches or blow-offs shall not be connected to any sewer, submerged in any stream, or installed in any manner which, in the opinion of the Inspector, will constitute a contamination or cross-connection hazard.

4. Hydrants:

Connection to Main: Each hydrant shall be restrained and connected to the main with a minimum 6" diameter branch, controlled by an independent 6" gate or resilient seat gate valve. All hydrant valves shall be restrained to the hydrant tee on the main line.

Setting of Hydrants: When hydrants are set, a drainage pit two feet in diameter and two feet below the bowl of the hydrant shall be excavated. The pit shall be filled with coarse gravel or #57 clean stone to a level of 6" above the weep hole. No hydrant drainage pit shall be connected to a sewer. The bowls of all hydrants shall be well braced against unexcavated earth with suitable concrete blocking, and when directed shall be restrained to the pipe with approved harnessing. All hydrants shall be thoroughly cleaned of dirt or foreign matter before setting.

5. Anchorage of Fittings: All fittings (i.e., each bend, tee, plug, valve, and cap) shall be prevented from moving by means of mechanical restraints, as shown in the standard details.

D. Installation of Fabricated Steel Tapping Sleeves: (Not for direct burial)

1. General: The following testing and conditions apply to all sleeves:

i. The tapping sleeve shall be tested in place to a minimum of 150 psi, for a minimum of 10 minutes with no loss of pressure.

ii. Tapping sleeves 16" and larger shall be supported by a concrete pedestal support to be designed by the Engineer.

iii. Clean pipe surface thoroughly, particularly in the area where the gasket will seal. The Contractor shall wipe the pipe in the area where the tap is to be made with a 1% chlorine solution prior to installing the sleeve.

iv. Lubricate pipe and gasket with soap and water. Under no condition shall antifreeze be used.

v. Mount body halves on pipe. Contractor shall ensure gasket is secure in gasket groove.

vi. Contractor shall ensure that the tapping nipple is pointing in its final direction so it will not be moved or rotated on the pipe.

vii. Insert bolts and hand tighten nuts, keeping equal gaps between body halves.

viii. Prior to tightening nuts, position outlet as required to suit the installation. Contractor shall ensure test connection is accessible.

ix. Tighten bolts, alternating from one side to the other to equalize the gap between halves. Continue to tighten bolts until sleeve halves conform to the contour of the pipe and all bolts are to a uniform tightness. The required torque for dry threads will be 70-100 ft. lbs. (Lubricated threads 35-50 ft. lbs.) On thin wall or badly corroded pipe care should be taken to prevent crushing or collapsing of the pipe.

x. A pressure test is required prior to tapping to test the sleeve and valve in place.

xi. Prior to pressure testing, the Inspector shall obtain a reading of line pressure in the system, either from a hydrant or a service. The pressure test should be at 2 ½ times line pressure or 200 psi whichever is greater. The duration of this pressure test shall be a minimum of ten minutes. If the sleeve fails the pressure test it shall be completely removed and apparent problem corrected or returned and a new sleeve used. The tapping sleeve, valve, and tapping machine assembly is to be adequately supported during the tapping operation to prevent movement or rotation of the tapping sleeve.

xii. Contractor shall complete tapping procedure and perform the necessary checking as required. Contractor shall furnish the Inspector with the tap coupon.

xiii. Check the bolts for tightness and re-torque, if required.

E. Installation of Services:

1. 3/4" and 1"

a. Taps on existing PVC Pipe except C-900 shall be made with service saddles.

b. Taps shall be made on a 45° angle.

c. Corporation stops shall have "cc" thread inlet and copper compression outlet if copper service is used.

d. Tap shall be made with a tapping machine equipped with a bit designed for the type of pipe being tapped.

e. Distance between taps or from a joint or bell shall be a minimum of 18".

f. Service pipe shall be type "K" soft copper or polyethylene pipe (PE 3406).

g. Services shall be installed with 36" minimum cover up to meter yoke where yoke shall be installed so that meter will set 18"-22" below finished grade.

h. Meter yokes shall be from approved materials list

i. Meter yoke and box shall be set 1' inside right-of-way or easement or as directed by the Inspector. Meters shall be installed on reasonably level ground or conform to the angle of the slope.

j. Backfill shall be hand tamped up to service pipe at tap to prevent corporation stop from being broken off during backfilling.

k. Set meter box in center of lot unless approved alternate location is provided. Meter boxes are not to be set in the driveway.

2. 1½" and 2" Services

a. All taps for 1½" and 2" services shall be made with service saddles. Gate vales and valve boxes are required for all services 2" and larger.

b. Taps shall be made on a 45° angle.

c. Corporation stops shall have "cc" thread inlet and copper flare outlet if copper service is used.

d. Tap shall be made with a tapping machine equipped with a bit designed for the type of pipe being tapped.

e. Distance between taps or from a joint or bell shall be a minimum of 18".

f. Service pipe shall be type "K" hard copper.

g. Services shall be installed with 36" minimum cover up to meter yoke where yoke shall be installed so that meter will set 18"-22" from finished grade.

h. Meter yokes shall be from approved materials list and be installed with a tailpiece of type "K" soft copper 36" long.

i. Meter yoke and box shall be set 1 foot inside right-of-way or easement or as directed by the Inspector. Meters shall be installed on reasonable level ground or conform to the angle of the slope.

j. Backfill shall be hand tamped up to service pipe at tap to prevent corporation stop from being broken off during backfilling.

3.4.3.2 Pressure Testing Of Water Main

A. Each section of the piping system including all water services, shall be subjected to a pressure test of 150 psi, or 1-1/2 times the working pressure whichever is greater, measured at the high point of the system. Maintain this pressure for a minimum of two hours with an allowable leakage (defined as the amount of water that must be added to maintain the test pressure within 5 psi of the test pressure) of not greater than:

$$L = \frac{S \times D \times \text{Square Root of } P}{133{,}200}$$

Where:
L = Allowable Leakage in Gallons per Hour
S = the length of the pipe tested in feet
D = the nominal pipe diameter in inches, and
P = the average test pressure in psi during the leakage test.

Prior to applying pressure to the lines, all mechanical restraints shall have been completed to the satisfaction of the Contractor and the Inspector. As the pipes are being filled, all air shall be expelled from the pipes by providing hydrants at the high points of the system.

Any defects discovered during this test shall be repaired and the test repeated until the results are satisfactory to the Inspector. The Contractor shall provide all equipment, materials, and labor necessary to conduct the test. The Contractor shall provide a suitable test pump and properly calibrated gauge or other means for measuring leakage, and a disinfected potable water tank, which is satisfactory to the Inspector.

B. Water for Testing: Water from the County's water system shall be used for flushing, sterilization, and testing. A hydrant meter shall be obtained from the Department of Utilities and Contractors will be billed for water used. Filling of water line may be performed provided permission has been obtained from the Inspector. Contractor is not permitted to operate valves on existing lines unless otherwise directed by the County's Inspector.

3.4.3.3 Disinfection

A. Prior to being placed in service, the pipe line and appurtenances shall be disinfected in general accordance with ANSI/AWWA C651, latest edition, AWWA Standard for Disinfecting Water Mains and the supplemental procedures as set forth below.

1. "Section 3 of AWWA C651" emphasizes six basic procedures in the disinfection process. These procedures are to:

   a. prevent contaminating materials from entering the water main during storage, construction, or repair;

   b. remove, by flushing or other means, those materials that may have entered the water main;

   c. chlorinate any residual contamination that may remain, and flush the chlorinated water from the main;

   d. protect the existing distribution system from backflow due to hydrostatic pressure test and disinfection procedures;

   e. determine the bacteriological quality by laboratory test after disinfection; and

   f. make final connection of the approved new water main to the active distribution system.

2. Preliminary Flushing:

   The main shall be flushed prior to disinfection at a velocity of not less than 2.5 ft/s unless the County determines that conditions will not permit the required flow. Adequate provisions shall be made by the Contractor for

disposal and neutralization of flushing water, so that no physical or environmental damage results.

3. Forms of Chlorine for Disinfection:

It is the Contractor's responsibility to be familiar with and have available for his employees the "Material Safety Data Sheets" of any products used as a source of chlorine and to provide the proper safety instructions and personal protective equipment to the employees mixing and using materials for disinfection of the water facilities.

a. Acceptable sources of chlorine for disinfection may be obtained from any of the following four sources:

1) Liquid sodium hypochlorite (household bleach).

2) Liquid sodium hypochlorite (industrial strength).

3) Calcium hypochlorite granules.

4) Calcium hypochlorite pills affixed to the interior of water pipe.

b. Only under extreme conditions and with the written approval of the County and under the direction of a holder of a State of Virginia Class III (or higher) water works operator's license can chlorine gas, regulated through proper metering equipment, be mixed with water to obtain a suitable disinfecting solution.

c. The direct introduction of chlorine gas (or liquid) from a pressure cylinder into a water line shall not be allowed.

d. The mixing of a source of chlorine to obtain a suitable disinfecting solution shall be as follows:

1) Liquid sodium hypochlorite is supplied in strengths from 5.25 percent available chlorine (commercially available household bleach) to 15 percent available chlorine (industrial strength sodium hypochlorite). A water-sodium hypochlorite solution shall be prepared by adding liquid sodium hypochlorite to water.

2) A water calcium hypochlorite solution shall be prepared by dissolving calcium hypochlorite granules containing 65% available chlorine by weight in a pre-determined volume of water to make the desired water-calcium hypochlorite concentration. Disinfection of new mains by water calcium hypochlorite solution shall not be used unless a suction or in-line strainer is available on the solution pump to prevent

any undissolved solids from entering the piping. An alternative method of straining the solution to remove undissolved granules may be approved by the Inspector on a case-by-case basis.

3) A water-chlorine gas solution may be used only when suitable equipment is available and shall be done under the direct supervision of a person familiar with the physiological, chemical, and physical properties of this element and who has a State of Virginia Class III or above water works operator's license and is properly trained and equipped to handle any emergency that may arise. That person shall provide a written work plan to the Inspector outlining the intended approach to mixing the chlorine solution.

4. Method of Chlorine Application and Testing:

a. The continuous feed method of applying the disinfecting solution shall be as follows: Water from the existing distribution system or other approved sources of potable water supply shall flow through an approved flushing mechanism at a constant, measured rate into the newly-laid pipeline. The water shall be mixed with a chlorine-water solution as prepared above, also fed at a constant, measured rate. The two rates shall be proportioned so that the chlorine concentration of the water and water/chlorine solution in the pipe is elevated to and maintained at, a minimum of 50 mg/l available chlorine.

Since the forms of preparation for a water-sodium hypochlorite or water-calcium hypochlorite concentration are a batch process, a method acceptable to the Inspector shall be available to replenish the concentration being fed and mixed with the water flow, so there is no interruption of the flow of disinfection solution.

To assure that this concentration is maintained, the chlorine residual shall be measured at intervals not exceeding 2,000 feet and at the end of all branch lines or cul-de-sacs in accordance with the procedures outlined herein. During the application of the chlorine-water solution, valves, hydrants, and any other appurtenances, shall be operated in order to be thoroughly disinfected. Chlorine-water solution application shall continue until the entire new main is filled with water having a residual of a minimum of 50 mg/l chlorine solution. The chlorinated water shall be retained in the main for at least 24 hours.

b. After the applicable retention period, the heavily chlorinated water shall be flushed from the main until the chlorine residual of the water leaving the main is equal to the chlorine residual of the incoming system water. At that time, the new system shall be valved off to allow the residual to dissipate to 0.2 mg/l before taking samples for bacteriological analysis. Additional instructions for disposal of the heavily chlorinated water are covered later in this section.

B. Bacteriological Tests:

1. After final flushing, and before the water main is placed in service, samples shall be collected and tested for bacteriological quality. Two consecutive negative tests from the same location shall show the absence of coliform organisms. At least two samples shall be collected by the County at least 24 hours apart at intervals determined by the Inspector (not exceeding 2,000 feet apart and at the end of all branch lines and cul-de-sacs) and tested by a qualified laboratory selected by the County. The County shall bill the Contractor a standard fee, to be set by the County, for this service including all retests.

2. Samples for bacteriological analysis shall be collected in approved sterile bottles or bags treated with sodium thiosulfate. If laboratory results indicate the presence of coliform bacteria, the samples are unsatisfactory and disinfection shall be repeated as prescribed above until the samples are satisfactory. Cleaning, disinfection, and testing shall be under the direction of the Inspector but remains the responsibility of the Contractor. The Contractor shall be responsible for any cost associated with the loading, hauling, discharging, and dechlorination of the heavily chlorinated water.

3.4.3.4 Supplemental Procedures For Disinfecting, Testing, And Flushing

A. In order to best assure satisfactory bacteriological results, it is essential that all aforementioned preventive and precautionary measures be taken prior to and during construction to protect the interiors of pipe, fittings, and valves against contamination. Failure to follow the precautionary measures increases the likelihood of unsatisfactory bacteriological tests and increases the construction requirements necessary for final acceptance.

B. Because of the large volume of water to be flushed from the fire hydrants, the Contractor must inspect the areas of discharge and provide the necessary equipment or materials to prevent any environmental damage or erosion. Sufficient hose length and termination fittings are to be provided so as to discharge the water into stable, heavily vegetated areas, drainage ponds, storm sewers, paved ditches, etc. The Contractor is to be responsible for any damage that may result from flushing.

C. When flushing heavily chlorinated water from the system, flush through fire or flushing hydrants to remove the disinfecting solution from the new line. For site specific locations the Inspector may require the use of a neutralizing chemical and piping arrangement. The expense of a neutralizing station is the responsibility of the Applicant/Contractor.

D. Flushing volumes shall be as below:

Main size (Nominal)	Double Check Valve Single Gate Size (Note 1)	INITIAL FLUSH (Note 2) Min. Flow (gpm)	FINAL FLUSH (Note 2) Max. Flow (gpm)
6”	4”	220	88
8”	4”	400	160
12”	6”	900	350
16”	6”	1500	624
20”	8”	2450	978
24”	10”	3525	1410
30”	Designed by Consultant	5505	2202
36”	Designed by Consultant	7935	3174

Flushing Schedule

Notes:

1) Approximation of flushing flows can be made by using either a pitot tube or a method of measuring the static discharge pressure from a hydrant used for discharge of the flushing water.

2) On a case-by-case basis, dependent upon such variables as length of new waterline (<200’), space limitations, or other unforeseeable obstacles, the Inspector may authorize the use of a smaller flushing device if the use of this device will provide for adequate flushing of the new waterline.

3.4.3.5 Testing Of Double Check Assembly

A. The Inspector will be responsible for ensuring the appropriate test is performed up to the outside isolation valve located on the inlet side of the double check assembly.

B. The Applicant is responsible for having the double check assembly tested by an approved tester prior to service being authorized to the building. Tests on the double check assembly will be conducted on an ongoing basis annually by a certified tester approved by the Department of Utilities.

3.4.3.6 Abandonment Of Water Service

Excavate at the main and expose the corporation stop. Turn off the corporation stop and disconnect the service pipe from the corporation stop. If practical, the corporation stop should be removed and a screw plug installed in the hole. If it is not practical to remove the corporation stop, provide a screw plug for the corporation stop. If the corporation stop is left in place, provide As Built Plans to show its location. Remove the meter box, yoke, and service line. The Inspector will deliver the meter to the Department of Utilities.

3.4.3.7 Abandonment Of Water Mains

Water mains and hydrants to be abandoned shall be permanently disconnected from the remaining system. If the abandonment takes place at a tee, the tee shall be removed from the main and a straight pipe installed. For other instances involving fittings, the proper fitting shall be installed to eliminate the previous connection.

All open ends on abandoned pipe to be permanently sealed by plugging with masonry, mortar, or a plug. All valve boxes, fire hydrants, flushing hydrants (blow-offs), or other appurtenances shall be removed. Salvageable items shall be returned to the Department of Utilities.

3.4.3.8 Clean-Up

Upon the completion of the installation of the water system and prior to the County acceptance all restoration shall be complete. The work area shall be restored to its original condition and pavement replaced to the satisfaction of VDOT and/or the County. All trash and debris shall be removed and disposed of properly.

4. APPROVED MATERIALS AND MANUFACTURERS LIST

4.1 Introduction

This section lists specific products and manufacturers that have been approved for use within the Spotsylvania County water and sanitary sewer system. This listing is intended to be used as a reference source for Department of Utilities' employees, contractors, and vendors. Materials produced by manufacturers not listed herein are **not** acceptable for use within the County's system. Manufacturers interested in submitting products for evaluation and possible approval should submit a written request in accordance with the procedures listed below.

4.2 Evaluation Process

4.2.1 Product and Design Review Committee

The Product and Design Review Committee will be responsible for:

- Review and approval of the "Approved Materials and Manufacturers List"
- Review and approval of the "Spotsylvania County Water and Sewer Standards"
- Review and response to comments and concerns regarding the Water and Sewer Standards expressed by contractors, engineers, developers, suppliers, etc
- Review of any other matters regarding the design and construction of the Spotsylvania County water and sewer systems.

The Product and Design Review Committee shall be composed of four to six employees of the Department of Utilities including at least one construction inspector, one member from the field operations staff, and one member who is a licensed professional engineer. The Director of Public Utilities will appoint all members.

4.2.2 Manufacturers and Products Submission Procedures

A manufacturer requesting review of his product shall complete the following procedures:

A. A written request shall be sent to the Product and Design Review Committee, Department of Utilities, 600 Hudgins Road, Fredericksburg, VA 22408

B. The request shall include, but not be limited to, submission (four copies of all documents) of the following:

1. A list of all applicable standards (AWWA, ANSI, etc.) regarding the product and AWWA, ANSI, etc certification of the product.

2. Adequate shop drawings and design information (brochures and other product information).
3. Location of the manufacturer's plant.
4. Location of the nearest local distribution point and retail outlet.
5. A list of any special tools, fittings or methods of construction that the product may require for installation and/or maintenance.
6. Spare parts and service availability information.
7. A 5-year history of the product documenting its performance.
8. Warranties.
9. Product sample (where appropriate). Submit one sample only of each product.
10. User references, with contact person and telephone numbers.
11. Life cycle costs.
12. A statement of why the approval of the product would be beneficial to Spotsylvania County.
13. Submissions shall be made at least 45 days prior to the meeting at which review is requested.

The applicant may be requested to make a presentation regarding the product to the committee that shall not exceed 20 minutes. Representatives at the meeting shall be in a position to offer any type of background on product use and locations, design and reference checks. The representative shall also have the authority to approve a trial run in Spotsylvania County if requested.

4.2.3 Design and Construction Submission Procedures

Questions, comments and requests for changes to the Water and Sewer Standards shall be made in writing to the Product and Design Review Committee at the above address. The committee will review each request.

4.2.4 Design Changes

After the Product and Design Review Committee has approved a product, the manufacturer or his representative shall inform the Committee, in writing, of any modifications in design or material. Such changes may require further evaluation and approval of the committee.

4.2.5 Withdrawal of Approval

The Committee may withdraw any approval as a result of a design change, field observation, testing, product failure, or other factors that, in the Committee's opinion, warrant such withdrawal.

4.2.6. Committee Recommendations

After completion of the review, the committee shall discuss the issue until a general consensus is reached. If a consensus cannot be reached, the recommendation shall be deferred to the next committee meeting. All product evaluations are final. Any

product that is not approved cannot be resubmitted for at least one year.

For each product that has been submitted, one of the following recommendations will be made:

A. Approval for Use: This approves a product for use throughout the Department's service area. All use of the product will be in conformance with the manufacturer's specifications and good engineering practices.

B. Conditional Approval for Use: This approves a product for use throughout the Department's service area; however, the product will be reviewed periodically to ensure that no unforeseen installation or maintenance problems have risen. After a suitable period of field observation, this approval may be upgraded to Approval for Use status. The frequency of review and the length of field observation period will be determined by the Product and Design Review Committee. If, during the field observation period, problems with installation, operation or maintenance of the product are observed, the Product and Design Review Committee may downgrade the status of the product to Disapproved for Use. All use of the product will be in conformance with the manufacturer's specifications and good engineering practices.

C. Limited Approval for Use: This approves a product for use only in certain sites or projects with the Department's service area. The Product and Design Review Committee will determine where the product can be used. The product will be reviewed periodically to ensure that no unforeseen installation, operation or maintenance problems have arisen. After a suitable period of field observation, this approval may be upgraded to Conditional Approval for Use or Approval for Use status. The frequency of review and the length of the field observation period will be determined by the Product and Design Review Committee. If, during the field observation period, problems with the installation, operation or maintenance of the product are observed, the Product and Design Review Committee may downgrade the status of the product to Disapproved for Use. All use of the product will be in conformance with manufacturer's specifications and good engineering practices.

D. Disapproved for Use: The product may not be used anywhere in the Department's service area. If a product has been given a Disapproved for Use status by the Product and Design Review Committee, the committee will not review the product again unless significant changes have been made to the product. The Product and Design Review Committee will not reconsider a disapproved product until at least twelve (12) months have passed from the date of disapproval.

E. Insufficient Information: Not enough information was provided to evaluate the product. When the Product and Design Review Committee

has received additional information, the Committee will evaluate the product at its next regularly scheduled meeting. As part of the request for additional information, the Committee may request a presentation from the manufacturer.

4.3 Water System

4.3.1 Water Pipe

4.3.1.1 Polyvinyl Chloride (PVC) 6" to 10"

A. AWWA: C-900 Minimum Class DR14.

B. Manufacturers:
1. Certainteed Corporation
2. J-M Manufacturing
3. Uponor EIT
4. National Pipe & Plastics
5. North American Pipe
6. Diamond Plastics

4.3.1.2 Ductile Iron (DIP)

4.3.1.2.1 Push-On or Mechanical Joint

A. AWWA: C-151 Minimum Thickness Class 52

B. Manufacturers
1. Griffin Pipe Products
2. U. S. Pipe and Foundry Company
3. American Ductile Iron Pipe

4.3.1.2.2 Push-On Restrained Joints

A. AWWA: C-150/AWWA:C111 Minimum Thickness Class 52

B. Manufacturers:
1. Griffin Snap-Lok
2. U.S. Pipe Tr-Flex

4.3.2 Fittings: (Bends, Crosses, Tees and Grade-Lok Offset Glands) Ductile Iron Only

A. AWWA: C-110

B. AWWA: C-153 Compact

C. Manufacturers:
1. Griffin Pipe Products

2. Tyler Pipe and Foundry Utilities
3. U.S. Pipe and Foundry Company
4. Sigma Corporation
5. Star Pipe Products, Inc.
6. Pipeline Components, Inc.
7. EBAA iron

4.3.3 Couplings (Transition or Straight) Non-Restrained

A. Stainless steel bolts and nuts and outside finish heat fused nylon coating or fusion bonded epoxy coating; minimum 12" long body.

B. Manufacturers
1. Romac 501 Series Long Sleeve
2. Ford #FC2A Long Sleeve
3. Ford Ultra Flex

4.3.4 Water Valves

A. Outside finish: heat fused nylon coating or fusion bonded epoxy coating.

B. Body and Disk: Ductile Iron only

4.3.4.1 Resilient Seated Gate Valves

A. AWWA C509

B. Manufacturers
1. Kennedy (Model KenSeal II-45714071)
2. Mueller A-2360 (Resilient Wedge)
3. U.S. Pipe – Metroseal 250
4. M & H (Style 4067)
5. American Flow Control (Series 2500)
6. Clow Figure F-6100

4.3.4.2 Butterfly Valves 14" and Greater

A. AWWA C504

B. Manufacturers
1. Mueller – Lineseal III
2. DeZurik
3. M & H – Style 4500

4.3.5 Fire Hydrants

A. AWWA C502, All Brass shall be NSF 61 approved

B. Manufacturers
1. Mueller Centurion A423
2. Kennedy K81D

4.3.6 <u>Meter Setters 2" (See Appropriate Standard Details)</u>

A. Ball valve inlet and outlet, 15" height, FIP

B. Manufacturers
1. Ford VBB77-15B-11-77
2. Mueller B-2423

4.3.7 <u>Corporation Stops: ¾" through 1"</u>

A. AWWA/CC taper by Grip Joint, Ball Valve

B. Manufacturers
1. Ford: F-1000-3
2. Ford: F-1000-4
3. Mueller: P-2500B, ¾" and 1"

4.3.8 <u>Compression Fittings</u>

A. Manufacturers
1. Mueller 110
2. Ford Pack Joint C-84

4.3.9 <u>Tapping Sleeves</u>

4.3.9.1 <u>M. J. Cast Iron or Ductile Iron Sleeve</u>

A. Manufacturers
1. Mueller (H-615 for 4" – 24" on Ductile Pipe and H-619 for 6" – 12" A/C Pipe)
2. American Flow Control – (Model 2800-A for A/C pipe; Model 2800-C for 6" – 12" D.I. and PVC pipes; Model 1004 for PVC pipe and 16" and larger D.I. pipe)
3. U.S. Pipe D.I. T-9 MJ Sleeve

4.3.9.2 <u>Resilient Seated Wedge Tapping Valves, AWWA C509</u>

A. AWWA C509

B. Manufacturers:
1. American Flow Series 2500 Resilient Wedge Valve
2. Mueller T-2360 Resilient Wedge Valve (for 6" – 12" only)
3. Kennedy Model 4950

4.3.10 Air Release Valves

A. Manufacturers
1. Cla-Val 34AR

4.3.11 Precast Concrete Vaults

A. Manufacturers
1. Americast
2. Clear Flow Company
3. Contractors Precast Corporation
4. Hanson Pipe and Products
5. Rotondo Precast

4.3.12 Water Meter Barrels/Vaults

A. Manufacturers
1. Hi-Density Polyethylene Plastic Box – Carson Industries Mid-States Plastics

4.3.13 Water Meter Barrel Frames and Covers

A. All meter lids shall have 1 3/4" hole in center

B. Manufacturers
1. Ford Monitor MC-24T with Pentagon nut
2. Ford C32T (18" Locking Meter Box and Lid)
3. Ford EXT-1 (18" x 24" Extension Ring)
4. Mueller
5. Bingham & Taylor
6. Vestal 32-233 #RMC-18L W/SN W/TR (18" Meter Frame & Cover)
7. Vestal 32-043 #ER-1824 Expanda Ring
8. Vestal 32-256 #Monitor R&C W/SN W/TR (20" Monitor Ring and Cover)
9. Vestal 32-046 #ER-2024 Expanda Ring
10. Vestal 32-280 #RMCL EX-HVY W/SN W/TR (Extra Heavy Locking Cover, Touch Read)
11. 32-090 #EX-HVY Monitor R&C W/SN W/TR (Locking Ring and Cover, Touch Read)
12. Capitol MXB-1241 (24" Monitor Style Meter Frame & Cover)
13. Capitol MBX ADP (18" Meter Pit Adapter Ring)
14. Capitol MBX C32 (18" Locking Meter Box and Lid)
15. AY McDonald 74Q 32 CT (18" Locking Meter Box and Lid)
16. AY McDonald 74MX1 Extension Ring
17. AY McDonald Heavy Traffic Lid

4.3.14 Valve Boxes

A. Cast-Iron Slip type only
1. Manufacturers
   a. Sigma
   b. Bingham & Taylor
   c. Capitol Foundry #564A
   d. Star Pipe
   e. Vestal
   f. East Jordan Iron Works
      5-1/4 Drop Lid 1.5" Skt Water
      #8555 10T Vlv Box Slip-Type Top
      #8555 16T Vlv Box Slip-Type Top
      #8555 26T Vlv Box Slip-Type Top
      #8555 24B Vlv Box Slip-Type Bottom
      #8555 30B Vlv Box Slip-Type Bottom
      #8555 36B Vlv Box Slip-Type Bottom

4.3.15 Copper Tubing, ASTM B88

A. Type K (Soft) ¾" and 1" Service Lines
1. Manufacturers
   a. Reading
   b. Mueller
   c. Cerro
   d. CM Howell

B. Type K (Hard) 2" and 3" Service Lines
1. Manufacturers
   a. Reading
   b. Mueller
   c. Cerro

4.3.16 Service Saddles

A. 4-Bolt Stainless Steel w/Fusion Bonded Epoxy Coat Only

B. Manufacturers
1. Ford FS 202 Series (with e-coat)
2. Ford FC 202 Series
3. Romac Industries, Inc. Style 202N

4.3.17 Pipe Restraints

A. Must Be UL Listed and FM Approved

B. Manufacturers
1. EBAA Iron, Inc. (Megalug 1100, 1500, and 2000)

2. Star Pipe Products, Inc. (All Grip and Star Grip)
3. Ford Uni-Flange (Series 1500 and 1400)
4. Sigma One-Lok Retainer Glands for C900/C905 and Ductile Iron Pipe
5. Romac Style 611 (PVC Pipe)
6. Romac Roma Grip Wedge (PVC and Ductile Iron Pipe)

4.3.18 Sampling Stations

A. Manufacturers
1. Kupferle Eclipse 94M

4.3.19 Casing Spacers (Stainless Steel Only)

A. Manufacturers
1. Cascade Style CCS With Style CCES End Seals
2. PSI Model #C8G-2 and Model #C12G-2
3. BMW SS Stainless Steel Casing Spaces

4.3.20 Double Check, Double Detector Check and Reduced Pressure Principle Devices

A. American Society of Sanitary Engineering Seal Approval

Call Spotsylvania County backflow coordinator at (540) 507-7311 for specific applications.

4.3.21 Yoke Bars (Epoxy Coated Only)

A. For 5/8” x ¾” meter
1. Manufacturers
a. Ford Y-502
b. Mueller H-5020
c. AY McDonald 14-2

B. For ¾” meter
1. Manufacturers
a. Ford Y-503
b. Mueller H-5030
c. AY McDonald 14-3

C. For 1” meter
1. Manufacturers
a. Ford Y-504
b. AY McDonald 14-4
c. Mueller

4.3.22 Yoke Angle Meter Ball Valve for 1” Copper Service Line

A. For 5/8” x ¾” Meter

1. Manufacturers
   a. Mueller B24273
   b. Ford BA94-324W

B. For ¾" Meter
1. Manufacturers
   a. Mueller B24273
   b. b. Ford BA94-324W

C. For 1" Meter
1. Manufacturers
   a. Mueller B24273
   b. Ford BA94-444W

4.3.24 <u>Yoke Angle Double Check Meter Valve for 1" Copper Service Line</u>

A. For 5/8" x ¾" Meter
1. Manufacturers
   a. Ford HHCA 94-424
   b. Mueller P 14466A
   c. AY McDonald 112 3Y2 34

B. For ¾" Meter
1. Manufacturers
   a. Ford HHCA 94-424
   b. Mueller P 14466A
   c. AY McDonald 112 3Y2 34

C. For 1" Meter
1. Manufacturers
   a. Ford HHCA 94-444
   b. AY McDonald 112 4Y2 44
   c. Mueller

4.3.25 <u>Waterline Marker</u>

A. Note must be on marker: "Call 1-800-552-7001 or Utilities at (540)507-7300 before you dig)

B. Manufacturer
1. Carsonite International SCH-2303

4.3.26 <u>Backflow Preventer Box</u>

Call Spotsylvania County Backflow Coordinator at 540-507-7311 for specifications and regulations.

4.4 Sanitary Sewer System

4.4.1 Gravity Sewer Pipe

4.4.1.1 Ductile Iron (DIP)

A. AWWA C151 Minimum Thickness Class 50

B. Acid Resistant Interior Lining

C. Manufacturers
1. Griffin Pipe Corporation (Sewper Coat)
2. U.S. Pipe and Foundry Company (Protecto 401)
3. American Ductile Iron Pipe (Protecto 401)

4.4.1.2 Polyvinyl Chloride (PVC) Pipe

A. 6”-15”: ASTM D3034, SDR 35 minimum

B. 18”-48”: ASTM F679, wall thickness T-1

C. Fittings: ASTM D1784

D. Gaskets: ASTM F477

E. Manufacturers
1. Certainteed Corporation
2. J-M Manufacturing Company, Inc.
3. Uponor EIT
4. Charlotte (Fittings Only)
5. Plastic Trend (Fittings Only)
6. National Pipe and Plastics Ever-Green Sewer Pipe
7. North American Pipe ASTM D3034
8. Multi Fittings (SDR 35, 26 Fittings Only)
9. Diamond Plastics (Pipe Only)
10. Vassallo/Syroco ASTM D3034 SDR 35 and 26 (Fittings Only)
11. Vassallo/Syroco ASTM D1336 SDR 35 and 26 (Fittings Only)
12. Harco (Fittings Only)

4.4.2. Pressure Sewer Pipe

4.4.2.1 Ductile Iron (DIP)

A. Minimum Thickness Class 52 with Acid Resistant Interior Lining

B. Manufacturers
1. Griffin Pipe Corporation (Sewper Coat)
2. U. S. Pipe and Foundry Company (Protecto 401)

3. American Ductile Iron Pipe (Protecto 401)

4.4.2.2 Polyvinyl Chloride (PVC)

A. AWWA C-900 Minimum Class DR14

B. Manufacturers:
1. Certainteed Corporation
2. J-M Manufacturing
3. Uponor ETI
4. North American Pipe

4.4.2.3 High Density Polyethylene (HDPE)

A. AWWA: C906, PE3408, Minimum SDR11, Pressure Class 200

B. Manufacturers
1. Chevron
2. Plexco
3. Uponor EIT

4.4.3 Manholes: Precast Concrete

A. ASTM C478, with Rubber O-Ring Gaskets

B. Manufacturers
1. Americast
2. Contractor's Precast
3. Hanson
4. Frederick Precast Concrete

4.4.4 Manhole Frames and Covers

A. Standard Size Lid – **23 ¾" only**

B. ASTM A48, Class 35B, AASHTO M-306

4.4.4.1 Standard Solid Frame and Cover

A. Manufacturers
1. East Jordan Iron Works #00194410 Manhole Frame for Standard Cover #00194443 Standard Manhole Cover
2. Capitol Foundry MH-1682*

4.4.4.2 Watertight Frame and Cover

A. Manufacturers

1. East Jordan Iron Works #00194412 Manhole Frame for Watertight Cover #00194441 Watertight Manhole Cover
2. Capitol Foundry MH-1682WT*

4.4.5 <u>Manhole Liners, HDPE</u>

A. Manufacturers
1. AgruGrip
2. GSE Studliner

4.4.6 <u>Gaskets and Flexible Manhole Connections</u>

A. Flexible cast-in-place seal or flexible boots installed with hydraulic pressure after manhole manufacture. Manhole openings made by hole-formers inserted during manufacture.

B. Manufacturers
1. Press-Seal Gasket Corp. Model PSX Positive Seal gasket for Installation in Pre-Casters' Plants by Factory Trained Personnel
2. A-Lok
3. International Precast Supply with Stainless Steel Adjustable Expansion Ring.
4. NPC Kor-N-Seal SL

4.4.7 <u>Internal Chimney Seals</u>

A. Manufacturers
1. Cretex

4.4.8 <u>Manhole Joint Seals</u>

A. O-ring gaskets meeting ASTM C-361 & ASTM C-443.

4.4.9 <u>Manhole Joint Wrap (in addition to O-ring specified above)</u>

A. Manufacturers
1. Wrapid Seal
2. Butyl-Tite by MultiSeal, Inc.

4.4.10 <u>Manhole Joint Sealers</u>

A. Butyl Mastic

B. Manufacturers
1. Ram Nek Pioneer 310 Mastic

4.4.11 <u>Waterproof Manhole Inserts</u>

A. Non-Corrodable with self-cleaning gas relief and vacuum relief valves

B. Manufacturers
1. Rainstopper by Southwestern Packing & Seals, Inc.

4.4.12 Polyethylene Slope Adjusting Ring

A. ASTM D1248

B. Manufacturers
1. Ladtech Polyethylene Manhole Adjusting Ring Wedge Design
2. Ladtech Polyethylene Manhole Adjusting Ring Flat Design

4.4.13 Saddles

A. Manufacturers

1. Vasallo – ASTM – B30304

4.4.14 Manhole Steps

Manhole steps not used, see Sec. 2.3.3

4.4.15 Cleanout Cover

A. Manufacturer
1. East Jordan Iron Works 8555010/06800006
2. Capitol Foundry WSSC-C/0*
3. Bingham & Taylor #8250

4.4.16 Valves

4.4.16.1 Valves – Plug, Full Port

A. Manufacturers
1. DeZurik Fig 100
2. Clow Eccentric Plug Valve C5413

4.4.16.2 Valves – Resilient Seated Gate

A. AWWA: C509

B. Manufacturers
1. Mueller A-2360 (Resilient Wedge)
2. U. S. Pipe – Metroseal 250
3. M & H Style 4067
4. American Flow Control (Series 2500)
5. Clow Figure F-6100
6. Kennedy Model KenSeal II – 4571RSGV

4.4.16.3 Valves – Swing Check

A. Manufacturers
1. Golden Anderson Figure 250-D

4.4.17 Backwater Valve For Manhole Vent

A. Manufacturers
1. Josam 67100

4.4.18 Sewage Combination Air/Vacuum Valve

A. Manufacturers
1. ARI No D-20SS

4.4.19 Sanitary Sewer Marker

A. Note must be on marker: "Call 1-800-552-7001 or Utilities at (540)507-7300 before you dig)

B. Manufacturer
1. Carsonite International SCH-2932

4.5 Water and Sanitary Sewer Systems

4.5.1 Modular Wall Seal

A. EPDM with stainless steel nuts and bolts
B. Manufacturers
1. Link Seal by Thunderline

4.5.2 Vault Doors

A. Type K heavy duty aluminum double leaf door, H2O rated

B. Manufacturers
1. Bilco
2. Halliday

4.5.3 Electrical Coating for Tracer Wire Connections

A. Coated solid tracer wire only. Stranded wire is unacceptable. Minimum 12 gauge wire. Continuity test is required. See Sec. 3.3.3.5

B. Manufacturers
1. 3M Scotchkote

5. APPENDICES

5.1 Appendix A – Water Meter Sizing

1. Determine the number and type of water fixtures needed and list on following form as appropriate.
2. Determine the combined fixture value. Multiply the fixture values times the number of fixtures to obtain the Total Fixture Value for each type. Add all total fixture values and place answer in the space provided on the form.
3. All other demands not listed in the sizing form shall be substantiated with data furnished by the Applicant's Engineer and/or his agent. If it is necessary to have a fixed demand and/or an irrigation demand, Applicant's Engineer and/or his agent must include information, in the appropriate location, on the water meter sizing form.
4. In completing the water meter sizing form, all water demands necessary for the building(s) and/or its intended use must be included. When fixed flows are to be combined with flows determined by fixture values, the following procedures shall be utilized. Convert fixture values to flow using figure 4.4 or 4.5 from AWWA M22. Add the fixed flow with the flow determined from fixture values to determine total flow. Using figure 4.4 or 4.5 from AWWA M22 convert the total flow back to fixture units. Size the meter based on the County's meter sizing policy.
5. The meter size necessary to serve a structure shall be determined on the basis of a fixture count. The fixture count to meter size equivalency is as follows:

Meter Size	Fixture Count Value
5/8"	0 - 50
1"	51 - 100
1-1/2"	101-250
2"	251 - 600
3" and larger	By Professional Engineer.

Meters 3" and larger shall be sized by a licensed Professional Engineer. Meter sizing shall be in accordance with the requirements AWWA M22.

Sizing Water Service Lines And Meters
Department Of Utilities, Spotsylvania County, Virginia
Fill in all spaces

Customer_____ Address_____

Building Address_____Type of Occupancy_____

Development Name_____ Tax Map No. ___Parcel No._____

Applicant_____ Signature_____

Title/Company_____ Daytime Phone #_____
I certify that the information on this form is true and correct.
Applicant's Signature:_____

Fixture		Fixture Value @ 35 psi		No. of Fixtures	Fixture Value
Bathtub		8	x	_____	=_____
Bedpan Washers		10	x	_____	=_____
Combination Sink and Tray		3	x	_____	=_____
Dental Unit		1	x	_____	=_____
Dental Lavatory		2	x	_____	=_____
Drinking Fountain	- Cooler	1	x	_____	=_____
	- Public	2	x	_____	=_____
Kitchen Sink	- 1/2" Connection	3	x	_____	=_____
	- 3/4" Connection	7	x	_____	=_____
Lavatory	- 3/8" Connection	2	x	_____	=_____
	- 1/2" Connection	4	x	_____	=_____
Laundry Tray	- 1/2" Connection	3	x	_____	=_____
	- 3/4" Connection	7	x	_____	=_____
Shower Head (Shower Only)		4	x	_____	=_____
Service Sink	- 1/2" Connection	3	x	_____	=_____
	- 3/4" Connection	7	x	_____	=_____
Urinal	- Pedestal Flush Valve	35	x	_____	=_____
	- Wall Flush Valve	12	x	_____	=_____
	- Trough (2 Ft. Unit)	2	x	_____	=_____
Wash Sink (Each Set of Faucets)		4	x	_____	=_____
Water Closet	- Flush Valve	35	x	_____	=_____
	- Tank Type	3	x	_____	=_____
Dishwasher	- 1/2" Connection	4	x	_____	=_____
	- 3/4" Connection	10	x	_____	=_____
Washing Machine	- 1/2" Connection	5	x	_____	=_____
	- 3/4" Connection	12	x	_____	=_____
	- 1" Connection	25	x	_____	=_____
Hose Connection (Wash Down)	- 1/2"	6	x	_____	=_____
	- 3/4"	10	x	_____	=_____
Hose (50 Ft. Wash Down)	- 1/2"	6	x	_____	=_____
	- 5/8"	9	x	_____	=_____
	- 3/4"	12	x	_____	=_____
Other:_____		___	x	_____	=_____

Combined Fixture Value Total =_____

5.2 Appendix B – Utilities Site Plan Checklist

The Applicant must submit a copy of this checklist, included with the County's Site Plan Application, with a certification that the plans reflect all applicable items on the checklist. The Utilities checklist is not all-inclusive, merely representative of items that are routinely improperly submitted or otherwise selected by the Department of Utilities for your convenience. Use of the checklist does not relieve the Applicant from complete compliance with all of the standards and requirements shown in this Manual, whether or not reflected on the checklist.

Reference	Completed	Item
1.4	_____	Site Plan complies with preliminary or master site plan.
1.3	_____	Site Plan complies with County Water/Sewer Master Plan
2.1	_____	Water services indicated
2.1	_____	Existing water main shown
2.1	_____	Proposed meter(s) shown
1.7	_____	Easements shown and labeled including size.
2.2.1	_____	Water and Sewer easements separate from other utilities
2.2.3.2	_____	Fire hydrants (500' max spacing residential, see Article 2 for others)
2.2.3.2	_____	Adequate access to hydrant for emergency apparatus - avoid location of fire hydrants along shoulders.
1.5	_____	Adjoining properties have access to water main either by easement or by water / sewer main extension to the property line
2.1	_____	Water/sewer main size and material indicated in plan and profile
2.2.6.4	_____	Water mains should be looped whenever possible
2.2.6.7	_____	Meter and vault size shown
3.4.2.10	_____	Correct vault detail provided
2.2.6.7	_____	Services provided to all existing and proposed lots or parcels
2.2.6.2	_____	Constant residual pressure - 20 psi minimum
2.1	_____	All valves, tees, crosses, bends, hydrants, etc are labeled and stationed
2.2.3.3	_____	Valves spaced not over 800' to 1,000' intervals
3.4.3.1.C.2	_____	Valve boxes outside pavement shall have tops set to the finish grade
2.2.2.3	_____	Tees must have at least 2 gate valves provided
2.2.2.3	_____	Crosses must have at least 3 gate valves provided
2.2.5.4	_____	Bend dimensions are clearly shown (degree or inches). Joint restraint
2.2.5.3	_____	Waterline size shown, minimums met (8" unless specifically approved)
2.2.6.7	_____	3/4" minimum service line for single family
2.2.2.1/VDH	_____	Water lateral and sewer lateral minimum 10' separation
2.2.2	_____	Minimum ground cover 42" over waterlines
2.2.3.6	_____	Flushing hydrants provided at all low points
2.2.2.1	_____	Scale provided, plan and profile (horizontal/vertical)
2.1	_____	Station given for all valves, tees, crosses, bends, hydrants, etc
2.3.1	_____	Special protection for water mains located under sewer mains
2.2.6.1	_____	Hydraulic Report submitted, meets requirements
	_____	Meter Sizing worksheets submitted, match construction drawings
2.2.6.6	_____	Water meter services using a corp stop or gate valve

2.2.6.1	_____	Fire flow test provided upon request
2.2.6.1	_____	Fire flow demand needed for project
2.1	_____	Sewer services stationed and labeled
2.1	_____	Existing sewer main shown
2.1	_____	Manholes shown and numbered
2.1	_____	Existing manhole connection indicated
2.3.3	_____	Sewer lines in and out of manholes at 90 degrees or greater
2.3.4	_____	Sanitary manhole- stub provided for future extension
2.3.3	_____	Commercial properties under Sewage Use/Pretreatment Ordinances have a monitoring manhole or grease trap
1.3, 1.4	_____	Pump station – requires separate specific approval. Considered complex,
2.3.3	_____	Maximum separation between manholes, 400’ if 15” or less, 600’ if > 15”
2.3.3	_____	Manholes in floodplains have water tight lids
2.3.4	_____	Sanitary House Connection/lateral min.4" with a cleanout at property line
2.1	_____	Minimum basement elevation shown
2.1	_____	Sewer line size indicated, including percent slope
2.3.2	_____	PVC-minimum depth 48”
2.3.1, 2.3.2	_____	DIP-required: low cover (2.3.2), boring (2.3.1), conflicts (2.3.1), stream crossings (2.3.1)
2.3.1	_____	Stream crossings consistent with Standard Detail for Stream Crossings
2.3.6.4	_____	Minimum grades met (refer to specifications - 8” - 0.40%; 10”-0.28%)
2.1	_____	Drop connections must be identified
2.1	_____	Inverts given for all lines, stubs and manholes (minimum 0.1’ and
2.1	_____	Rim elevation indicated

Certification:

Date:_____

Engineering Firm:_____

Engineer’s Name:_____
(Printed)

_____
(Signature)

5.3 Appendix C – Spotsylvania County Standard Water and Sewer Notes

1. All water and sewer lines and construction thereof shall comply with the latest version of the Spotsylvania County Department of Utilities Water and Sewer Design and Construction Standards Manual.
2. When the Spotsylvania County Water and Sewer Design and Construction Standards contain a project category in the approved materials and manufacturers list, only those products specifically listed may be used.
3. All changes to the approved construction plans must be approved in advance by the Utility Department.
4. All water lines up to 10" diameter may be Class 200 C900 (SDR 14) Poly-Vinyl Chloride (PVC) pipe or ductile iron. All water lines 12" and larger or where indicated shall be Pressure Class 350 or Class 52 Ductile Iron, conforming to ANSI-A21.51 (AWWA C151). Ductile Iron pipe shall have cement mortar lining and seal coating in accordance with ANSI A21.4 (AWWA C104). Bituminous outside coating shall be in accordance with ANSI/AWWA C104. All pipes regardless of material shall have 10 gauge solid copper insulated tracer wire installed adjacent to the pipe. See section 3.2.3.9 in the Design and Construction standards for more details.
5. Pipe Fittings shall conform to ANSI/AWWA A21.10/C110 for standard size fitting or ANSI/AWWA A21.52/C153 for compact fittings. All joints shall be either mechanical joint or push-on joint conforming to ANSI/AWWA A21.11/C111. Fittings shall be cement mortar lined with a seal coat in accordance with ANSI/AWWA A21.4/C104. All fittings shall have a minimum pressure rating of 250. Lr on profiles indicates length of restrained pipe at fitting.
6. The contractor shall verify all dimensions and elevations in the field before starting construction and notify the Engineer of any discrepancies.
7. There shall be a 10' horizontal separation between water lines and/or sewer lines and a vertical separation of 18" between the bottom of the water main and the top of the sewer main. This applies to building sewer laterals also.
8. All bacteriological samples of water lines shall be taken by Utility Department personnel. A minimum of 48 hours notice is required to schedule these samples.
9. All water line and sewer line select backfill, structural backfill, and pipe bedding material shall be compacted to 95% VTM-1 dry density. All controlled fill in trenches under pavement or where otherwise specified shall be compacted to VTM-1 dry density. Compaction reports may be required to be submitted.
10. No existing water main is to be tampered with by tapping, opening, or closing valves without a Utility Department inspector present on the job site.
11. No new water lines are to be filled or flushed without a Utility Department inspector present.
12. Ductile Iron pipe shall be polywrapped in the presence of acid soils.

13. The contactor is responsible for daily as-built plans on all construction. All laterals and appurtenances shall be referenced from the nearest manhole.
14. All manholes shall be waterproofed on exterior surface by the manufacturer in accordance with Spotsylvania County Specifications.
15. Sewer connection to existing sanitary manholes shall be made by core drilling manhole and installing a rubber boot to create a watertight connection.
16. "Doghouse" manholes are not allowed unless approved by the Utility Department.
17. A Cleanout cover assembly in accordance with the standard details shall be installed on each sewer lateral cleanout.
18. An air test is required on new sanitary sewer lines. A vacuum test is required on new manholes.
19. All gravity sanitary sewer mains and laterals shall be PVC sewer pipe type PSM poly-vinyl chloride unless noted otherwise on the plans. Pipe and fittings shall meet ASTM designation D-3034-73. Minimum designation used shall be SDR-35. Class A bedding shall be used on depths exceeding 24 feet.
20. All sanitary sewer laterals shall be installed at a minimum grade of ¼"per foot (2.08%) unless approved by the Engineer and/or Owner.
21. The contractor shall be responsible for installing all sewer laterals to each lot as shown on the construction plans under the inspection and approval of the Department of Utilities.
22. Contact the Utility Department Cross/Connection and Backflow Coordinator for requirements for backflow prevention.
23. The developer/Owner is responsible for responding to Miss Utility Requests until water and sewer lines are accepted. Any damage to water and sewer mains must be repaired prior to acceptance.

5.4 Appendix D – Utilities Internal Project Tracking

Applicant:_____

Project:_____

County References:_____

	Water	Sewer
Applicant		
Site plan approval		
Schedule pre-construction conference		
Submit easement deeds		
Utilities		
Conduct pre-construction conference		
Applicant		
Pressure test lines		
Record easement deeds		
Bring roads and ditches to final grade		
Disinfect completed system, flush & submit bacteriological samples		
CCTV sewer lines		
Request tentative acceptance in writing		
Submit capital cost data		
Utilities		
Inspect for tentative acceptance		
Review CCTV sewer lines		
Submit to DEQ or VDH/ODW (if required)		
Applicant		
Correct operational deficiencies		
Record deed of easement		

	Water	Sewer
Utilities		
GRANT TENTATIVE ACCEPTANCE		
Utilities/Planning Department		
Reduce performance bond		
Applicant		
Pave roads & adjust valves & manholes		
Correct remaining deficiencies		
Submit construction completion certificate to VDH (if necessary)		
Provide as-builts and shop drawings		
Request final acceptance in writing		
Submit letter stating system is paid for in full		
Post 10% defect bond		
Utilities		
Legal review form		
Grant final acceptance		
Release performance bond		
Inspect for defects (9 months)		
Applicant		
Correct defects		
Utilities		
Release performance bond and close record		
Inspect for defects (9 months)		
Release defect bond and close record		

5.5 Appendix E – Reimbursement Agreement

REIMBURSEMENT AGREEMENT

THIS AGREEMENT, made this ___ day of _____, 20__, by and between _____, a Virginia _____ (hereinafter referred to as the "Owner"), and the COUNTY OF SPOTSYLVANIA, VIRGINIA, a political subdivision of the Commonwealth of Virginia (hereinafter referred to as the "County"):

WHEREAS, the Owner is improving a certain parcel of land located in Spotsylvania County, shown on the County Tax Map as _____ , hereinafter referred to as the "Property," which is to be developed as a development known as "_____" (herein "the Project"); and,

WHEREAS, the site plans by _____ ,titled "_____" and dated _____ (hereinafter referred to as the "Plans"), include ____ feet of sewer line, ____ feet of water line, and all necessary appurtenances, some of which shall be located under paved public rights-of-way; and,

WHEREAS the Plans were approved by the Spotsylvania County Department of Utilities on _____,

WHEREAS, as part of the development of the Project, the Owner has submitted an application for and received a permit to construct the public facilities shown on the Plans, as the same were last revised and approved, to serve the Project; and,

WHEREAS, the Virginia Department of Transportation ("VDOT") maintains certain paved public-rights-of-way that have been dedicated to the Commonwealth of Virginia or County and has requested that County oversee the construction of utility lines within or under such rights-of-way; and,

WHEREAS, the County has requested the Owner enter into this Agreement to reimburse to the County for all costs and expenses connected with the inspection, compaction, and all associated geotechnical services to be performed by the County, its agents, or contractors, in regard to the construction of public water and sewer facilities under pavement and roadways in the VDOT right-of-way, in satisfaction of VDOT's requirements and Section 3.2.3.8.1 of the Spotsylvania County Water and Sewer Design and Construction Standards Manual.

NOW, THEREFORE, THIS AGREEMENT WITNESSETH: That for and in consideration of the premises and the covenants and agreements set out herein, the Owner and the County agree as follows:

A. The Owner has obtained VDOT approval of the Plans showing the installation of public water and sewer facilities under the pavement or within the roadway.

B. The Plans have been approved by the Spotsylvania County Department of Utilities as being in accordance with the Spotsylvania County Water and Sewer Design and Construction Standards Manual.

C. The Owner understands the requirements of the Spotsylvania County Water and Sewer Design and Construction Standards Manual and hereby agrees to reimburse the County for the County's costs and expenses associated with geotechnical services to be performed in connection with the installation of public water and sewer facilities under pavement and roadways in the VDOT right-of-way, as shown on the Plan, as the same was last revised and approved.

D. The Owner and the County agree to the following general provisions as governing this agreement:

1. The County will send the Owner monthly invoices for work performed by the County's geotechnical engineer.
2. The County shall review all reports in a timely fashion and notify the Owner of the results. The County will forward copies of all reports to the Owner as requested.
3. Payment to the County for reimbursement of costs associated with the construction of public utilities, as referenced in paragraphs above, shall occur within thirty (30) days of receipt of an invoice.

4. This Agreement shall be binding upon the Owner, it successors and assigns.
5. In the event either party to this Agreement shall fail to comply with the provisions of this Agreement, the aggrieved party shall have available to it all remedies at law or in equity, to enforce the terms of the Agreement or to obtain compensation for damages resulting from any default.
6. The phrase "costs and expenses" shall include, without limitation, all direct and indirect costs of the work indicated, specifically to include all inspection, compaction, and laboratory services and payment of all fees.
7. Nothing contained herein shall be interpreted or operate to create a relationship of partners, joint ventures, brokers, agency or employment between the parties. It is agreed that no party shall act as the agent for the other party without an express written authorization to act as an agent. Each party shall maintain sole and exclusive control over its employees, contractors, agents and operations.
8. The parties agree that each party shall be solely responsible for the simple negligent acts or omissions of its employees causing harm to persons not a party to this Agreement. Any third party contractors selected to provide services pursuant to this Agreement shall provide proof of such insurance as may be requested by the County. Nothing in this Agreement shall be deemed a waiver of the sovereign immunity of the Commonwealth of Virginia.
9. Should any section or part of any section of this Agreement be rendered void, invalid or unenforceable for any reason by any court of law exercising competent jurisdiction, such a determination shall not render void, invalid or unenforceable any other section or part of any section of this Agreement. The representations made in the premises of this Agreement are to be construed as terms of this Agreement.
10. This Agreement may not be assigned without the prior written consent of all parties.
11. This Agreement contains the entire understanding of the parties and supersedes all prior oral or written agreements. No party has relied on any

oral or written representation of the other unless such representation is incorporated in this Agreement. This Agreement may not be modified except by written document signed by all of the parties.

12. This Agreement shall be governed, interpreted and construed under the laws of the Commonwealth of Virginia and any dispute arising from this Agreement shall be submitted to a proper state court of the Commonwealth of Virginia.

IN WITNESS WHEREOF, the parties hereto have affixed their signatures and seals:

SIGNATURES ON THE FOLLOWING PAGES

Company Name: _____

By: _____

Its: _____

STATE OF VIRGINIA
CITY/COUNTY OF _____, to-wit:

The foregoing document was acknowledged this the _____ day of _____, 20__, by _____ who is the _____ of _____.

_____
Notary Public

COUNTY OF SPOTSYLVANIA, VIRGINIA

BY: _____
County Administrator

My Commission Expires:

ADDITIONAL SIGNATURES ON THE FOLLOWING PAGE

COMMONWEALTH OF VIRGINIA
COUNTY OF SPOTSYLVANIA, to-wit:

The foregoing document was acknowledged on this the _____ day of _____, 20012, by _____, the County Administrator of the County of Spotsylvania, Virginia.

_____
Notary Public

My Commission Expires:

APPROVED AS TO FORM:

_____
COUNTY ATTORNEY

5.6 Appendix F – Corrosion Control Program

1.01 General

A. The Following Standards are designed for the collection of information related to soil conditions that may contribute to the corrosion of pipe and/or the line components installed in the service area of Spotsylvania County Utility Department's water main and sewer line systems.

B. The knowledge of soil conditions is required in order to have an effective corrosion program for future corrosion control considerations. The extent of knowledge of these soil conditions may vary based on the size and overall importance of the pipeline and the cost of repair or replacement of the pipeline.

C. An engineering corrosion control flow chart to identify routine processes that can be followed during the design phase of new pipeline installations can be found in §1.07 of this Appendix.

1.02 System Priority Classifications

A. Class 1 Systems: Class 1 systems are considered to be the highest of priority and shall meet the following criteria:

1. Sewage Force mains that are 6-inchs and greater in diameter

2. All water mains 16inches in diameter and greater

B. Class 2 Systems: Class 2 systems should be considered as high priority and evaluated on case-by-case bases to determine if special corrosion control measures are warranted. These pipelines would meet the following criteria:

1. Pipe lines that are 12-inches in diameter or these that provide one feed to distribution systems where a failure would result in significant disruption to customer service.

2. Any pipeline where the repairing or taking the line out of service due to corrosion would require significantly high repair costs, difficult repair conditions, and long-term customer service disruption.

C. Class 3 Systems: Class 3 systems are considered to be less of a priority as related to the intent of the overall prioritization of a corrosion control program and would meet the following criteria:

1. Distribution pipe lines less than 12 inches in diameter and considered part of systems normally installed as part of subdivisions.

2. Any pipeline system that does not meet the criteria as defined in **Class 1** or **Class 2**

pipeline priority considerations.

1.03 Soil Data collection

A**. Collection of soil samples:**

1. The Engineer shall be responsible for soil sample collection and evaluation for the purpose of corrosion control.

2. The Engineer, for specific corrosion control project investigations and cathodic protection design consideration, may collect additional soil samples.

B**. Frequency of soil sample collection:**

1. During project development soil samples shall be taken during soil bores associated with geological investigations. Soil samples shall be collected as follows:

   a. Soil bores associated with proposed roadway easements should be taken at a minimum of 1,000 linear feet along the proposed pipeline alignment for the purpose of collecting soil bag samples and performing corrosion analysis testing. These samples should be collected in concert with other geo-tech samples required for typical development studies.

2. For known pipeline builds that meet Class 1 criteria additional soil sample collections may be requested by the Utilities Department based on desired information related to specific corrosion control design considerations.

C. **Procedures for collecting soil samples:**

The Engineer shall

1. Fill out a standardized soil data collection form for corrosion soil evaluations that includes the following information:

   a. Date of sample collected.

   b. Location where sample was obtained.

   c. The depth, which the soil sample was collected. Depths shall be representative of anticipated water main depths. If water main location is not known, the depth shall be approximately 4.5 feet below existing grade, or the deepest location where soil is available for testing (if rock is encountered before 4.5 feet)

1.04 Analysis of Soil Samples

A. Each collected soil sample should be tested for corrosivity. The soil samples should be tested for pH levels, chloride concentrations, sulfate concentration, sulfide content and resistivity (as is and saturated). Data for each sample should be recorded on a data sheet form that accompanied the soil sample. The results of the soil data collection efforts should be submitted to the Spotsylvania Utility Department at the time of the first submittal of Construction Plan and Profiles.

B. The test methods to be used for laboratory analysis must comply with the following ASTM standards.

1. Sample Preparation (ASTM D1193)
2. Sulfate Content (ASTM Standard Test Method D516)
3. Chloride Content (ASTM Standard Test Method D512)
4. Resistivity (ASTM Standard Test Method G57)
5. pH (ASTM Standard Test Method G51)
6. Presence of Sulfides (ASTM N/A)
   a. ASTM standards are unavailable and the following procedures should be used:

Fill the bottom of a small beaker with a sample of the as-is-soil. Place several drops 5% hydrochloric acid (HCL) on the soil and let stand for a few seconds. determine the odor of the soil sample noting the presence or absence of sulfide elements according to the following odors:
Sulfide Present – Strong rotten egg odor
Trace Sulfide Present – Slight rotten egg odor
No Sulfide Present - No rotten egg odor
If the test is conducted correctly, the results should be obvious.

1.05 Documentation and classification of soils

A. Based on the soil testing result each soil sample should be categorized into one of Three categories as follows:

1. Class “A” Highly corrosive
   a. Soil resistivity values < 3000 ohm/cm
   b. Test values that indicate pH values of the soil between 0-4.0
   c. Soil samples that consistently indicate the presence of sulfides along the route of the propped pipeline alignment.
   d. Soil samples that consistently indicate the presence of sulfates content >50ppm.

2. Class “B” Corrosive
   a. Soil resistivity values between 3000-5000 ohm/cm
   b. Test values that indicate pH values of the soil >4.0
   c. Soil samples the consistently indicate no presence of sulfides along the route of the proposed pipeline alignment.
   d. Soil samples that consistently indicate the presence of sulfate content <50ppm
   e. Soil samples that consistently indicate the presence of chlorides <50ppm.

3. Class “C” Moderately corrosive
   a. Soil resistivity values <5000 ohm/cm
   b. Test values that indicate pH values of the >4.0
   c. Soil samples the consistently indicate no presence of sulfides along the route of the proposed pipeline alignment.
   d. Soil samples that consistently indicate the presence of sulfate content <50ppm
   e. Soil samples that consistently indicate the presence of chlorides <50ppm

1.06 Engineering and Design of Pipeline installations

A. All pipeline installations should be evaluated by the Engineer as follows

1. Prioritization evaluation of the proposed pipeline installation as a Class 1, 2 or 3 pipeline installation.

2. Refer to the engineering flow chart as shown on Part 1.07 of this document As a tool to determine the corrosion control considerations of the proposed pipeline installation.

1.07 Engineering Flow Matrix – See next page

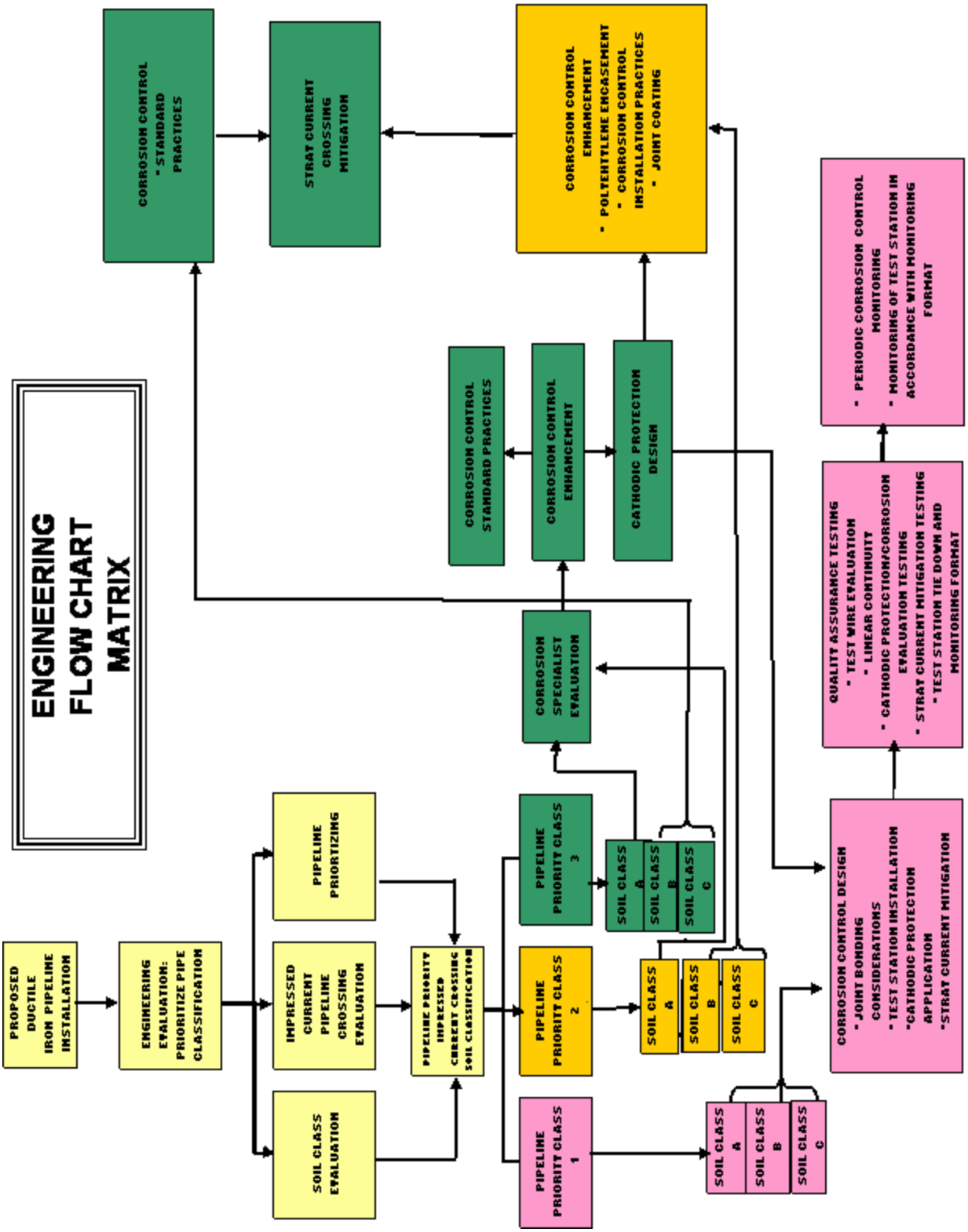
ENGINEERING FLOW CHART MATRIX
PROPOSED DUCTILE IRON PIPELINE INSTALLATION
ENGINEERING EVALUATION: PRIORITIZE PIPE CLASSIFICATION
PIPELINE PRIORITIZING
IMPRESSED CURRENT PIPELINE CROSSING EVALUATION
SOIL CLASS EVALUATION
PIPELINE PRIORITY IMPRESSED CURRENT CROSSING SOIL CLASSIFICATION
PIPELINE PRIORITY CLASS 1
PIPELINE PRIORITY CLASS 2
PIPELINE PRIORITY CLASS 3
SOIL CLASS A
SOIL CLASS B
SOIL CLASS C
SOIL CLASS A
SOIL CLASS B
SOIL CLASS C
SOIL CLASS A
SOIL CLASS B
SOIL CLASS C
CORROSION SPECIALIST EVALUATION
CORROSION CONTROL STANDARD PRACTICES
CORROSION CONTROL ENHANCEMENT
CATHODIC PROTECTION DESIGN
CORROSION CONTROL - STANDARD PRACTICES
STRAY CURRENT CROSSING MITIGATION
CORROSION CONTROL ENHANCEMENT - POLYETHYLENE ENCASEMENT - CORROSION CONTROL INSTALLATION PRACTICES - JOINT COATING
CORROSION CONTROL DESIGN - JOINT BONDING CONSIDERATIONS - TEST STATION INSTALLATION - CATHODIC PROTECTION APPLICATION - STRAY CURRENT MITIGATION
QUALITY ASSURANCE TESTING - TEST WIRE EVALUATION - LINEAR CONTINUITY - CATHODIC PROTECTION/CORROSION EVALUATION TESTING - STRAY CURRENT MITIGATION TESTING - TEST STATION TIE DOWN AND MONITORING FORMAT
- PERIODIC CORROSION CONTROL MONITORING - MONITORING OF TEST STATION IN ACCORDANCE WITH MONITORING FORMAT

5.7 Appendix G – Standard Details

G1	TYPICAL UTILITY INSTALLATION - CURB AND GUTTER
G2	TYPICAL UTILITY INSTALLATION - DITCH
G3	PVC OR D.I. PIPE TRENCH - UNPAVED AREAS
G4	PIPE TRENCH - ASPHALT OR SURFACE TREATED ROAD
G5	PIPE ENCASED IN STEEL CASING PIPE
G6	PIPE OFFSETS
G7	UTILITIES MARKERS
S1	STANDARD MANHOLE
S1-A	POLYETHYLENE MANHOLE ADJUSTMENT RING - FLAT
S1-B	POLYETHYLENE MANHOLE ADJUSTMENT RING - WEDGE
S2	DEEP MANHOLE 18' OR DEEPER
S3	ACID RESISTANT MANHOLE
S4	SHALLOW MANHOLE
S5	MANHOLE FRAME AND COVER
S6	BOLT DOWN (VANDALPROOF) MANHOLE FRAME AND COVER
S6-A	WATERTIGHT MANHOLE INSERT
S7	MANHOLE AIR VENT
S8	DROP MANHOLE INTERIOR
S9	DROP MANHOLE EXTERIOR
S10	LATERAL SERVICE CONNECTION
S10-A	NEWPORT NEWS CLEANOUT BOX & LID
S10-B	CLEANOUT COVER DETAIL
S11	FORCE MAIN DISCHARGE
S12	CLAY DAM
S13	SEWER ANCHORAGE
S14	SEWER AIR RELEASE / VACUUM VALVE SETTING
S15	SEWER PUMP STATION TYPICAL WIRING DIAGRAMS
S16	SEWER PUMP STATION PLAN VIEW
S17	SEWER PUMP STATION CROSS SECTION VIEW "A-A"
S18	SEWER PUMP STATION CROSS SECTION VIEW "B-B"
S19	SEWER PUMP STATION WET WELL COVER
S20	LOW PRESSURE HOUSE CONNECTION
W1	1" WATER AIR RELEASE VALVE
W2	FIRE HYDRANT
W3	VALVE BOX
W4	WATER METER SETTING 5/8" TO 1"
W5	WATER METER SETTING 1-1/2" TO 2"
W6	WATER METER SETTING OVER 2"
W7	WATER METER BOX 5/8" TO 1"
W7-A	WATER METER BOX 5/8" TO 1" IN DRIVEWAY
W8	WATER METER BOX 1-1/2" TO 2"
W9	WATER METER BOX OVER 2"
W10	PRESSURE REDUCING VALVE VAULT

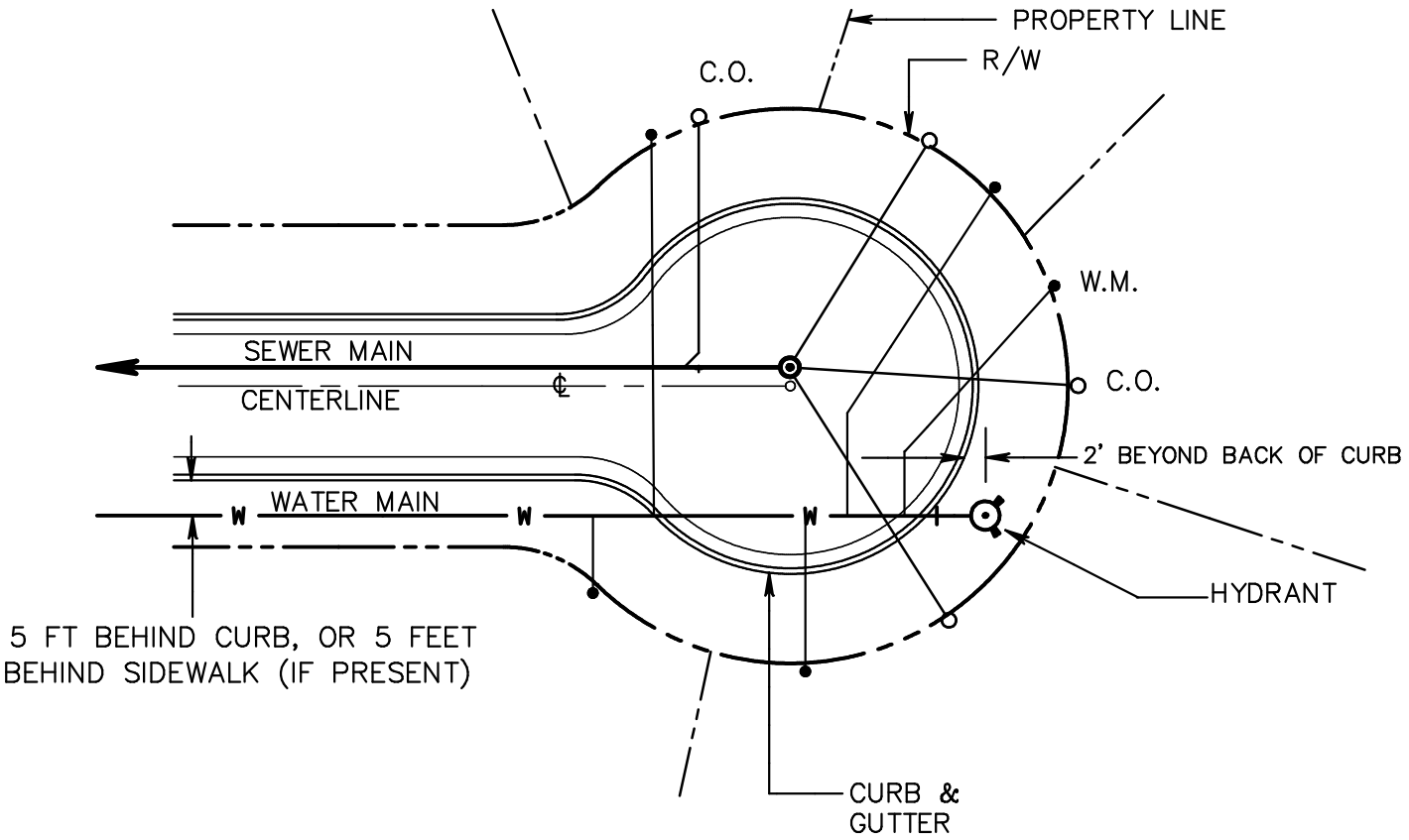

NOTES:

1. INSTALL SEWER LATERALS WITH TYPICAL 10 FT CLEARANCE TO WATER SERVICE LINES. SEE DETAIL "LATERAL SEWER CONNECTION"

2. IN THE EVENT THAT THE WATER SERVICES AND BOXES CANNOT BE ARRANGED AS REFLECTED IN THIS DETAIL, AT LEAST 10 FEET HORIZONTAL SEPARATION IS REQUIRED BETWEEN THE WATER METER BOX/SERVICE LINE AND HYDRANT.

3. INSTALL WATER AND SEWER CONNECTIONS AT 10 FT. APART TYPICALLY AT THE CENTER OF THE LOT BEING SERVED.

4. PROVIDE WATER AND SEWER SERVICE TO ALL LOTS IMMEDIATELY ADJACENT TO THE CONSTRUCTION.

Not to Scale

DATE April 2013 REVISIONS	Spotsylvania County Department of Utilities	Typical Utility Installation Curb and Gutter	DRWG. NO. G1

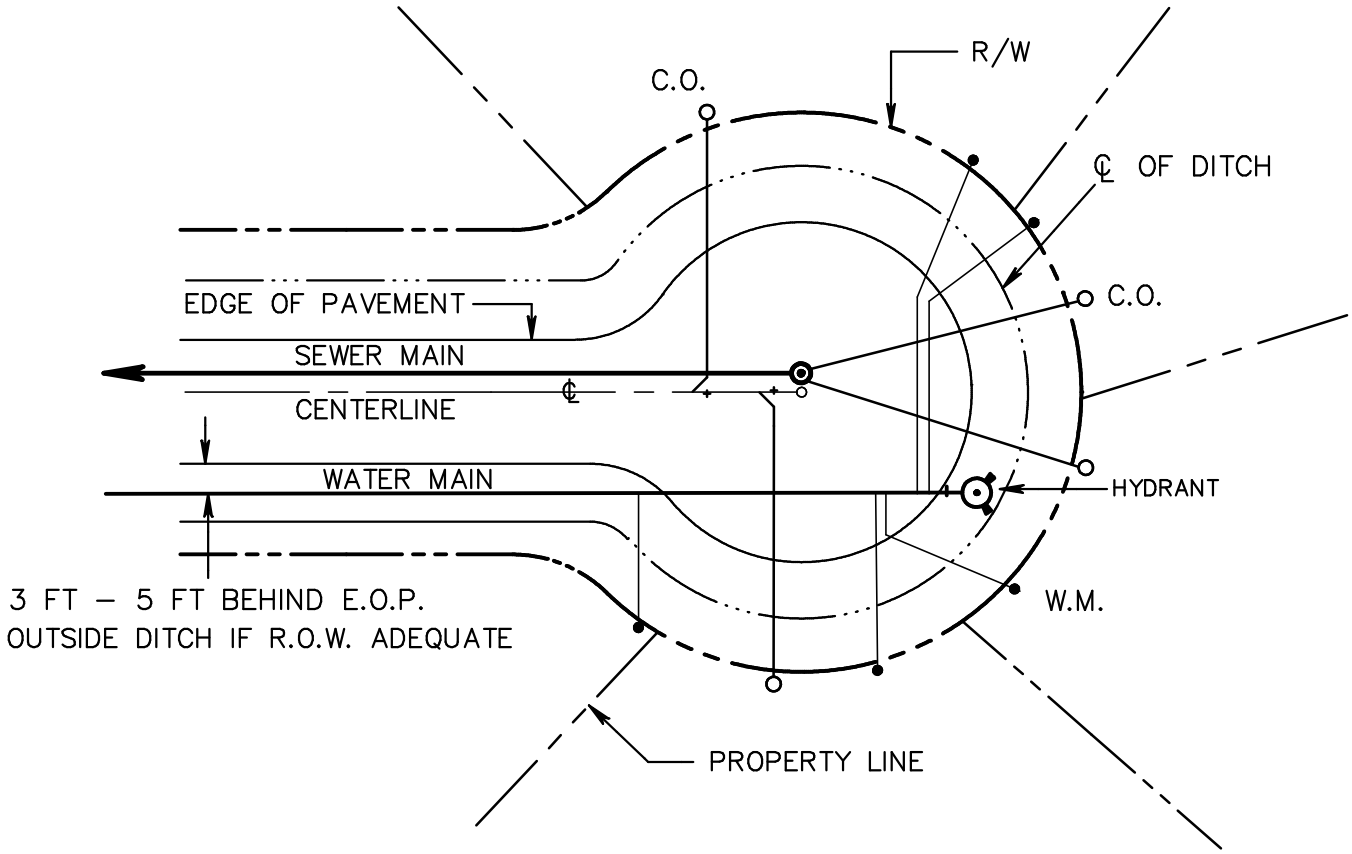

NOTES:

1. HYDRANT IS TO BE PLACED BETWEEN THE DITCH AND EDGE OF PAVEMENT ON LEVEL GROUND. IF THIS IS NOT POSSIBLE, THE UTILITY CONSTRUCTION INSPECTOR MUST BE CONSULTED. HYDRANT SHOULD BE 1' IN FRONT OF PROPERTY PIN OR BEYOND DITCH, MINIMUM 3.5' COVER UNDER DITCH.

2. IN THE EVENT THAT THE WATER SERVICES AND BOXES CANNOT BE ARRANGED AS REFLECTED IN THIS DETAIL, AT LEAST 10 FEET HORIZONTAL SEPARATION IS REQUIRED BETWEEN THE WATER METER BOX/SERVICE LINE AND HYDRANT.

3. INSTALL SEWER LATERALS WITH TYPICAL 10 FT CLEARANCE TO WATER SERVICE LINES. SEE DETAIL "LATERAL SEWER CONNECTION".

4. INSTALL WATER AND SEWER CONNECTIONS AT 10 FT. APART TYPICALLY AT THE CENTER OF THE LOT BEING SERVED.

5. PROVIDE WATER AND SEWER SERVICE TO ALL LOTS IMMEDIATELY ADJACENT TO THE CONSTRUCTION.

Not to Scale

DATE April 2013 REVISIONS	Spotsylvania County Department of Utilities	Typical Utility Installation Ditch	DRWG. NO. G2

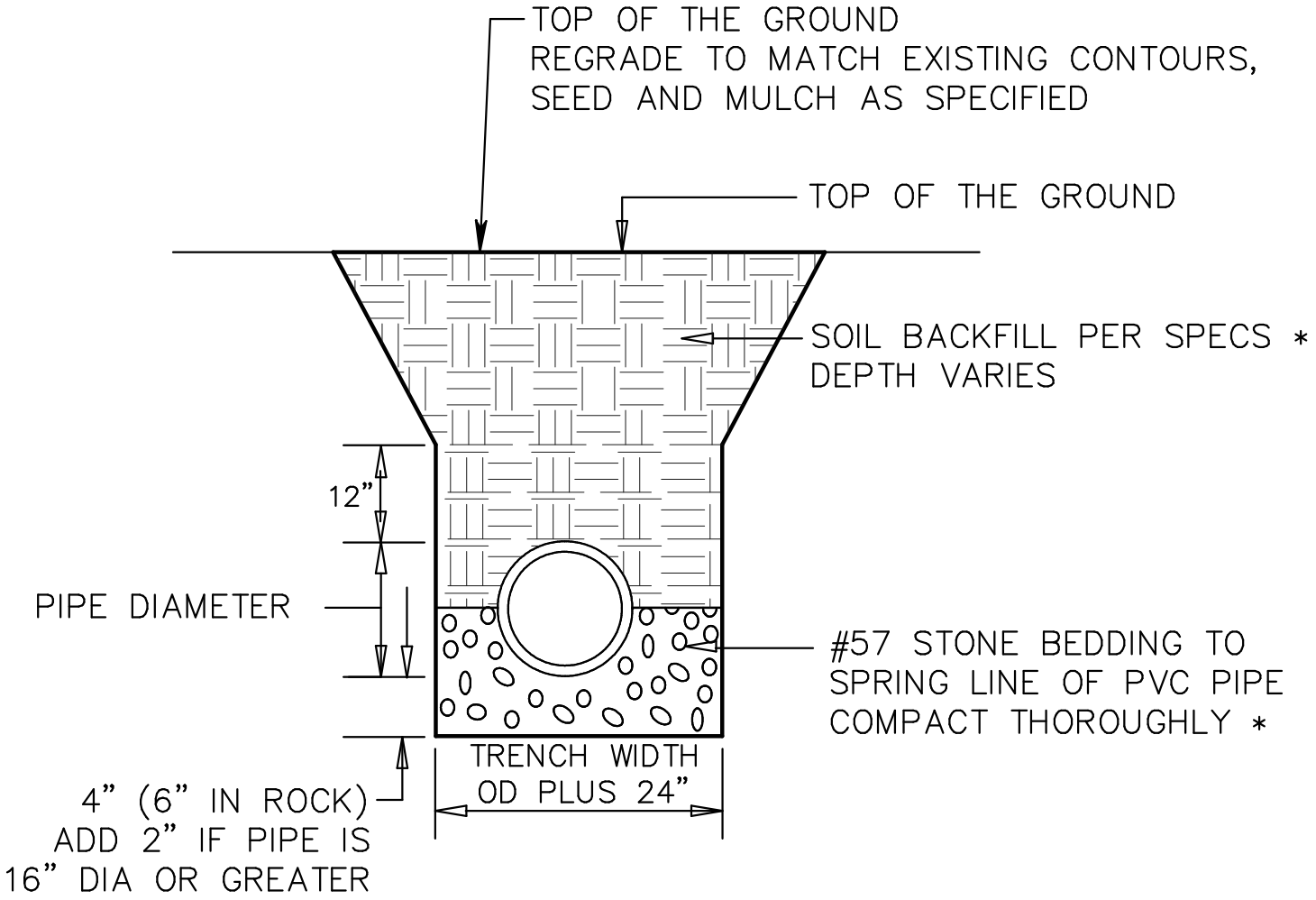

* COMPACT TO 95% OF THEORETICAL DENSITY IF WITHIN 10 FT OF ROAD SHOULDER, PAVEMENT OR STRUCTURES, AND 85% ELSEWHERE.

Not to Scale

DATE April 2013	Spotsylvania County Department of Utilities	PVC or DI Pipe Trench Unpaved Areas	DRWG. NO.
REVISIONS			G3

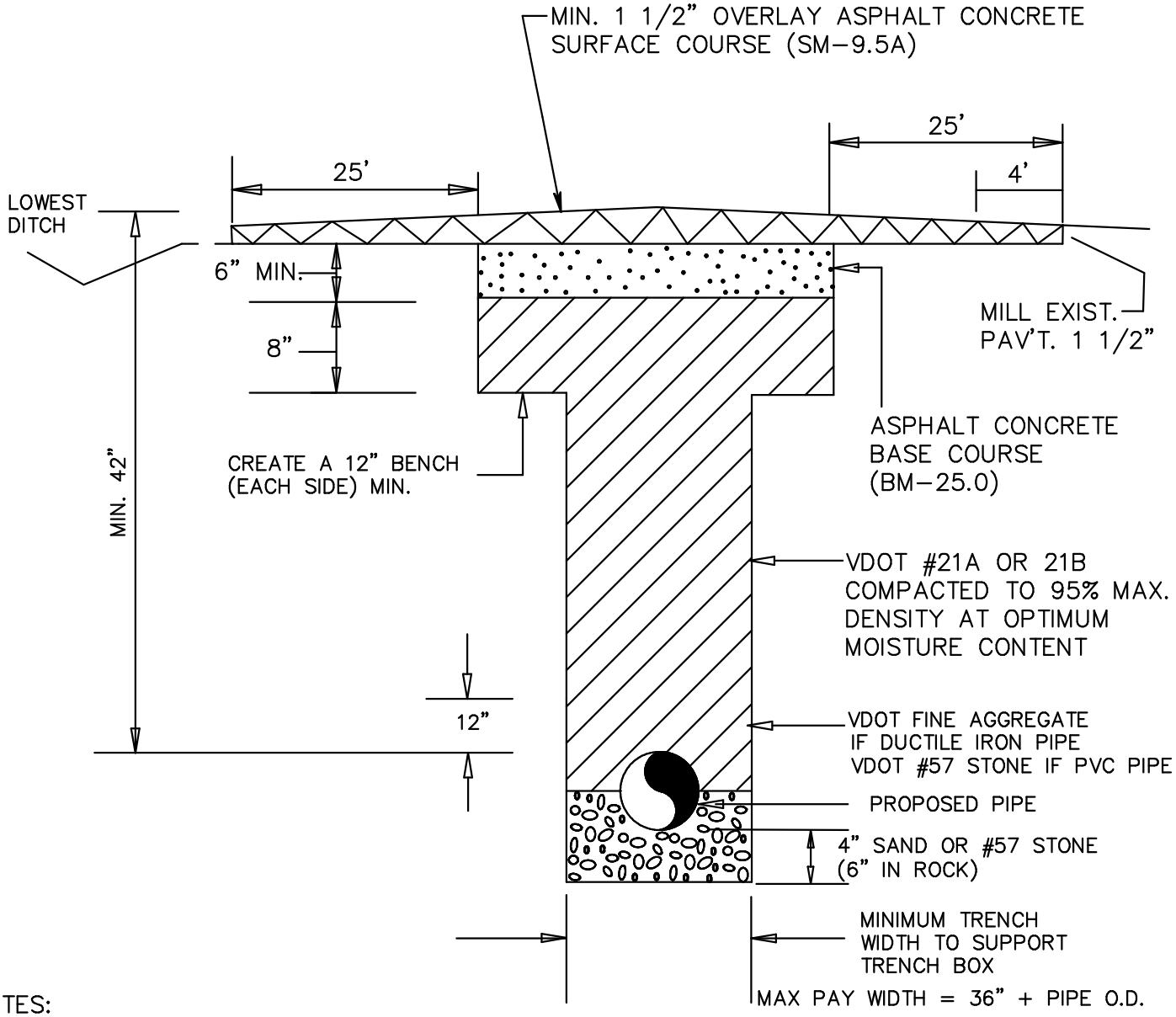

NOTES:

A. RESTORATION SHOWN. FOR NEW PAVEMENT, INSTALL PIPE AS ABOVE, AND CONSTRUCT PAVEMENT SEPARATELY AS A SINGLE UNIT.

B. FOR PARALLEL WORK, A COPY OF A DENSITY TEST RESULTS TAKEN EVERY 6 INCHES OF FILL MUST BE FURNISHED BY THE CONTRACTOR TO VDOT. THE TEST RESULTS MUST VERIFY THAT TESTS WERE TAKEN AT A MINIMUM SPACING OF EVERY 100 FEET ALONG THE TRENCH.

C. COMPACT BEDDING AND BACKFILL TO 95% OF THEORETICAL DENSITY.

D. RE-STRIPE PAVEMENT TO MATCH PRE-CONSTRUCTION CONDITIONS

Not to Scale

DATE April 2013	Spotsylvania County Department of Utilities	Pipe Trench Existing Asphalt Surfaces And Roadways	DRWG. NO.
REVISIONS			G4

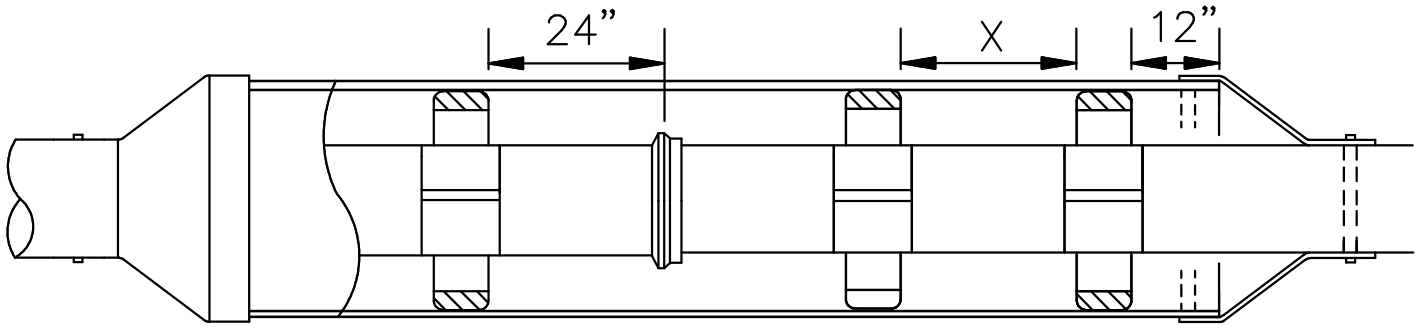

NOTES:

1. STEEL CASING PIPE SHALL BE ASTM 1–139 GRADE B, MINIMUM THICKNESS 0.375" FOR UP TO 24" CASING AND 0.625" FOR 24" THRU 42" CASING. GREATER THICKNESS MAY BE REQUIRED FOR LONG CASINGS, OR BY VDOT OR A.R.E.A. (RR). DESIGN MUST INCLUDE APPROPRIATE CORROSION CONTROL MEASURES.

2. CARRIER PIPE SHALL BE MECHANICAL JOINT DUCTILE IRON (MIN PRESSURE CLASS 350), RESTRAINED AT EACH JOINT FOR SEWER MAINS, DUCTILE IRON PIPE MUST EXTEND FROM MANHOLE TO MANHOLE. EXTEND RESTRAINED JOINT DUCTILE IRON PIPE MINIMUM FOUR PIPE LENGTHS BEYOND CASING.

3. FOR SEWER MAINS, INCREASE MIN. SLOPE THRU CASING BY 50% FROM MANHOLE TO MANHOLE.

4. DRAWINGS MUST SHOW SIZE AND LOCATION OF BORING PITS AND DIRECTION OF BORE.

5. CARRIER PIPE SHALL BE CENTERED WITHIN CASING BY AN APPROVED CASING SPACER MANUFACTOR FOR THE APPLICATION.

6. CASING PIPE SHALL BE SEALED BY USE OF WRAPAROUND END SEALS.

7. THREE CASING SPACERS SHALL BE ATTACHED TO EACH JOINT OF CARRIER PIPE WITH ONE AT THE CENTER AND ONE NOT MORE THAN 24" FROM EACH END.

8. ONE CASING SPACER SHALL BE LOCATED NOT MORE THAN 12" FROM EACH END OF CASING PIPE.

9. WHEN INSTALLING CARRIER PIPE, CONTRACTOR SHALL PUSH SO THAT PIPE JOINTS ARE ALWAYS BEING COMPRESSED.

Not to Scale

DATE April 2013	Spotsylvania County Department of Utilities	Pipe Encased in Steel Casing Pipe	DRWG. NO. G5
REVISIONS			

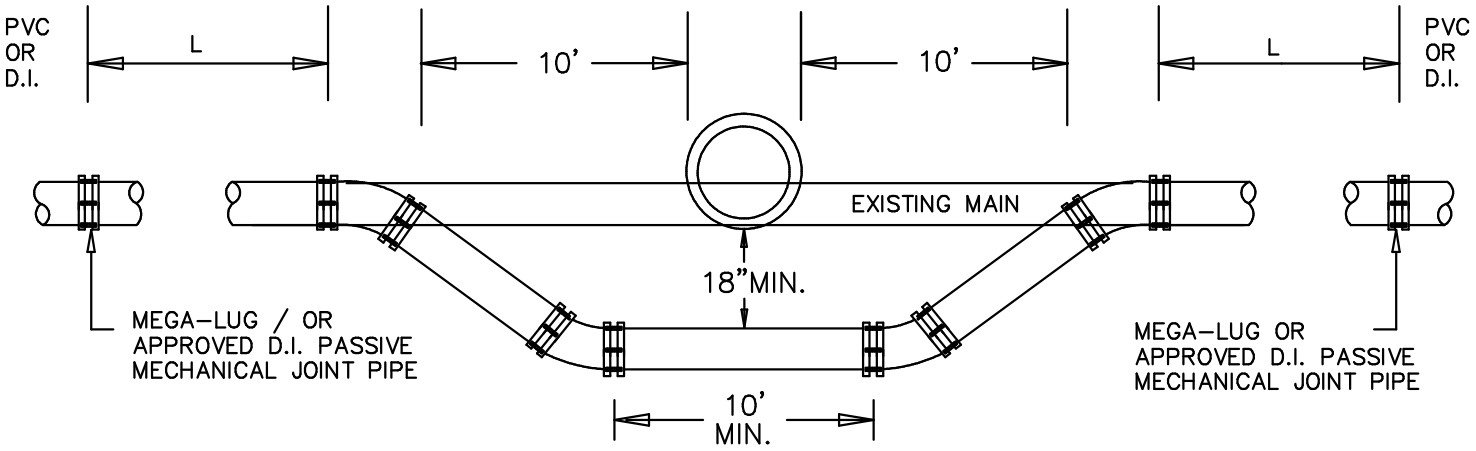

LOWERED SECTION TO BE OF DUCTILE IRON MECHANICAL RESTRAINED JOINT PIPE WITH RESTRAINED JOINTS AT ANY INCLUDED JOINTS. THE ENGINEER SHALL CALCULATE LENGTH OF RESTRAINED SECTION AND DETAIL ON PROFILE SECTION.

MIN. 4" OF # 57 STONE BELOW & ABOVE PVC PIPE
MIN. 4" OF FINE AGGREGATE BELOW & ABOVE D.I. PIPE

Not to Scale

DATE April 2013	Spotsylvania County Department of Utilities	Pipe Offsets	DRWG. NO.
REVISIONS			G6

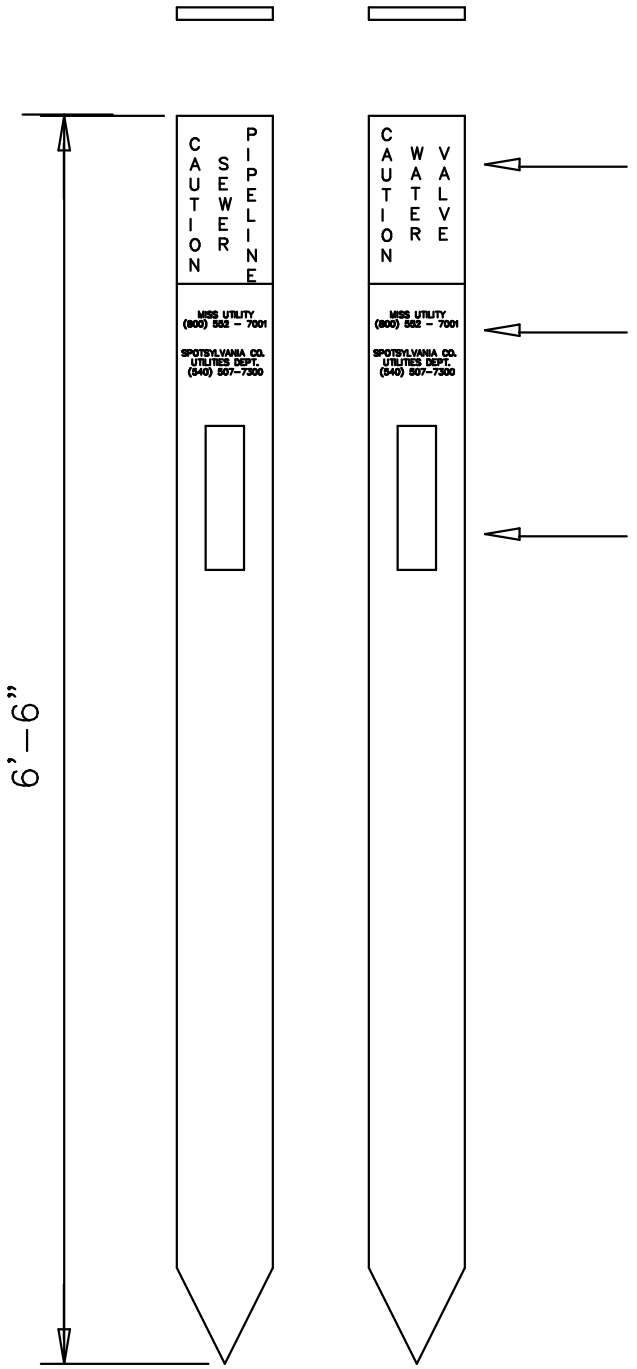

CAUTION WITH TYPE OF UTILITY GREEN FOR SEWER AND BLUE FOR WATER.

BOTH PHONE NUMBERS FOR MISS UTILITY (800) 552-7001 SPOTSYLVANIA UTILITIES (540) 507-7300

REFLECTIVE TAPE

Not to Scale

DATE April 2013	Spotsylvania County Department of Utilities	Utilities Markers	DRWG. NO.
REVISIONS			G7

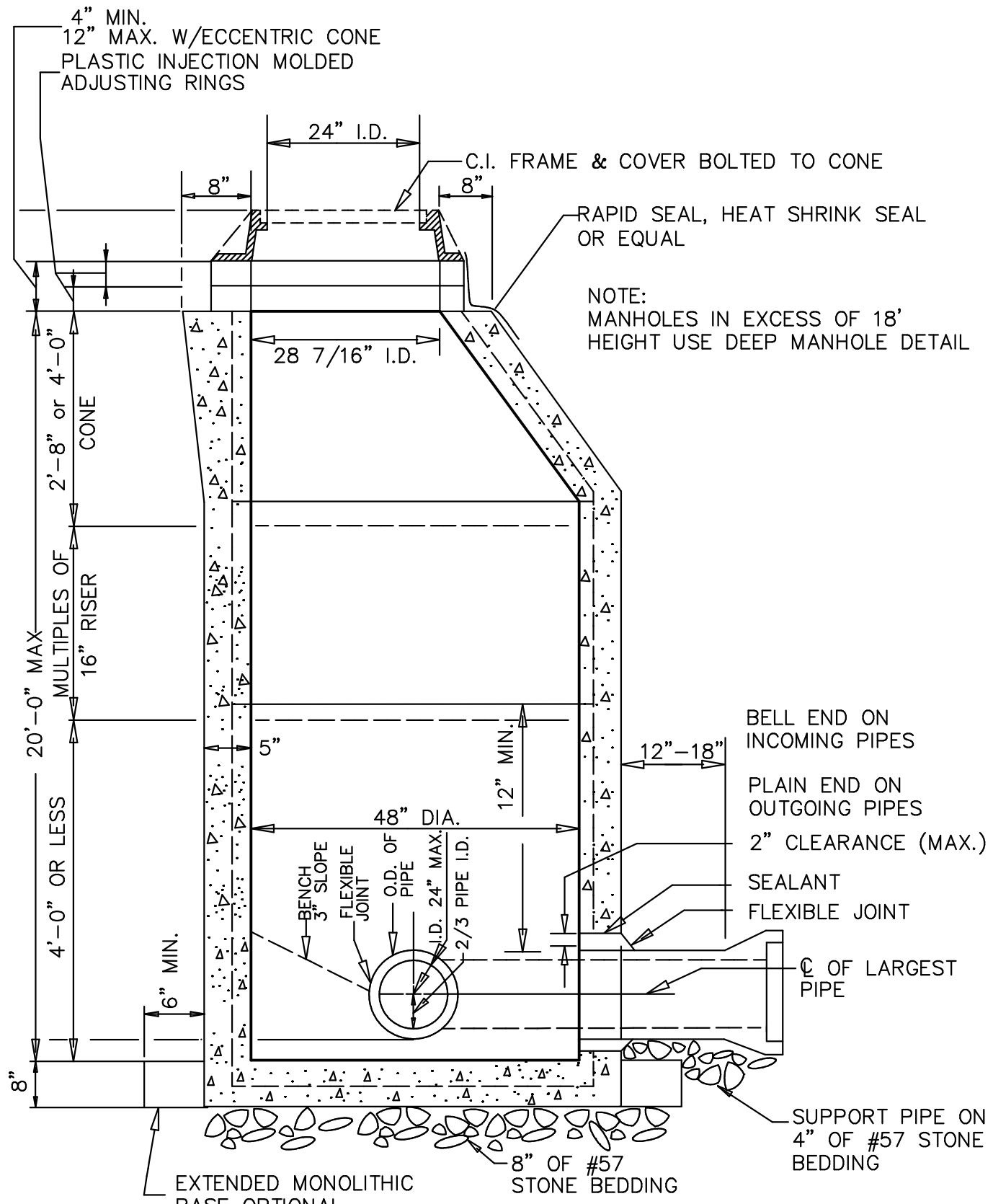

NOTE: STONE BEDDING SHALL EXTEND TO THE OUTER BOUNDARY OF ALL UNDISTURBED AREAS SURROUNDING THE MANHOLE.

NOTE: BENCH MAY BE CONC. BRICK AND MORTAR.

Not to Scale

DATE April 2013	Spotsylvania County Department of Utilities	Standard Manhole	DRWG. NO. S1
REVISIONS			

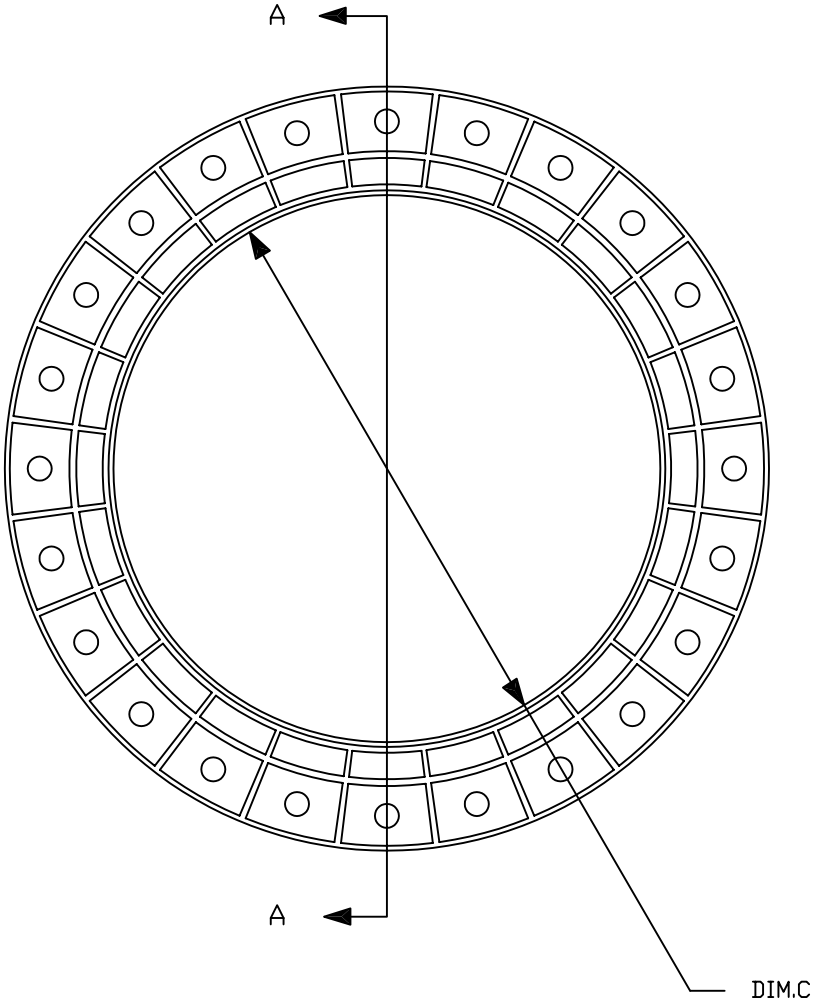

PLAN VIEW

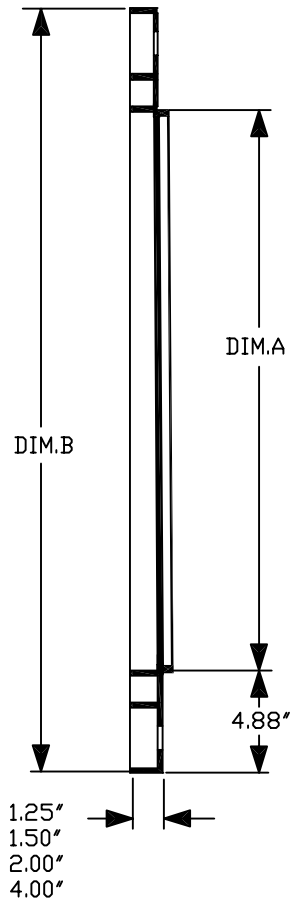

SECTION "A-A"

DIMENSION SCHEDULE

CONE SIZE	DIM.A	DIM.B	DIM.C
24"	23.75"	33.50"	23.25"
27"	26.75"	36.50"	26.25"
30"	29.75"	39.50"	29.25"
36"	35.75"	45.50"	35.25"

DESCRIPTION :

PLASTIC INJECTION MOLDED ADJUSTING RING

MOLDED FROM HIGH DENSITY POLYETHYLENE AS DEFINED IN ASTM SPECIFICATION # D1248-84

ACTUAL RESIN PROPERTIES WILL VARY ALLOWING FOR THE UTILIZATION OF 100% REGRIND MATERIAL

THE PRECENT OF POST CONSUMER WASTE TO INDUSTRIAL WASTE WILL VARY WITH AVAILAABILITY AND PROPERTY RETENTION NEEDS

COLOR, SHADE AND UNIFORMITY WILL VARY WITH THE MIX OF THE POST CONSUMER AND INDUSTRIAL WASTE MATERIALS

DIMENSIONS SHOWN ARE NOMINAL - ACTUAL SIZE WILL VARY WITHIN ALLOWABLE TOLERANCE AND REQUIRED FIT

Not to Scale

DATE Oct. 2005	Spotsylvania County Department of Utilities	Polyethylene Manhole Adjustment Ring – Flat	DRWG. NO.
REVISIONS			S1–A

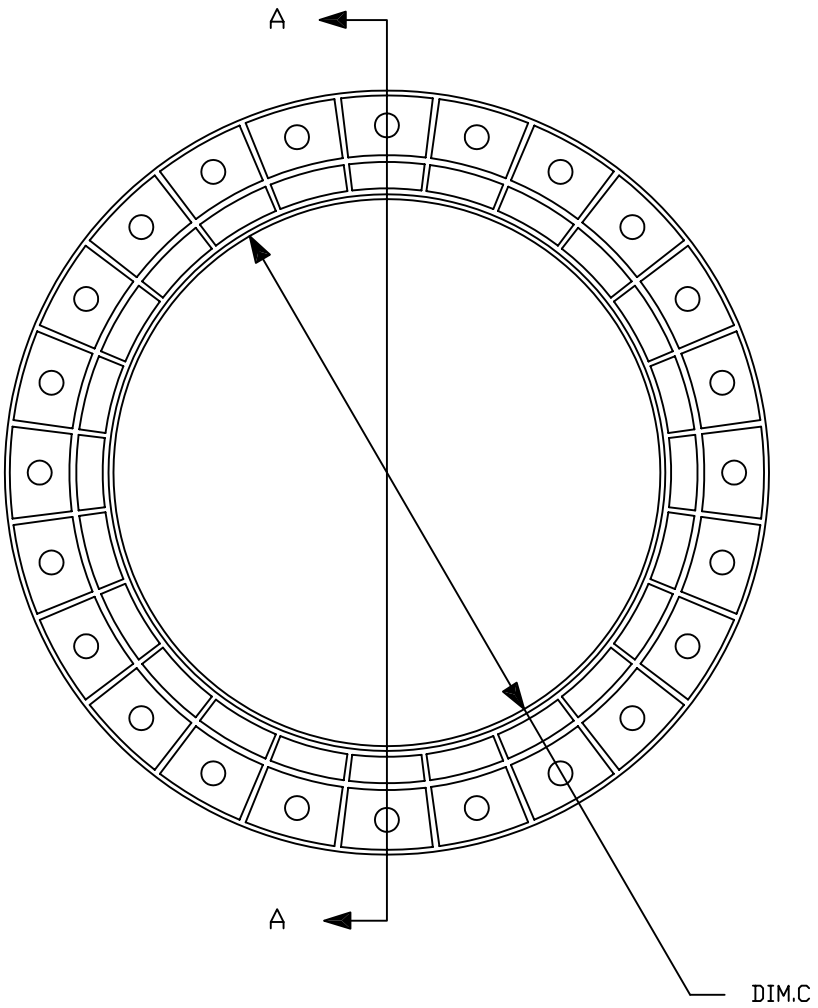

PLAN VIEW

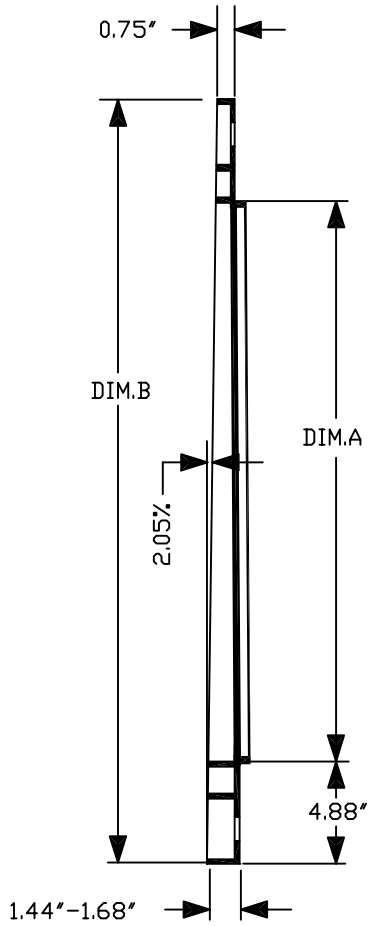

SECTION "A-A"

DIMENSION SCHEDULE

CONE SIZE	DIM.A	DIM.B	DIM.C
24"	23.75"	33.50"	23.25"
27"	26.75"	36.50"	26.25"
30"	29.75"	39.50"	29.25"
36"	35.75"	45.50"	35.25"

DESCRIPTION :

PLASTIC INJECTION MOLDED ADJUSTING RING

MOLDED FROM HIGH DENSITY POLYETHYLENE AS DEFINED IN ASTM SPECIFICATION # D1248-84

ACTUAL RESIN PROPERTIES WILL VARY ALLOWING FOR THE UTILIZATION OF 100% REGRIND MATERIAL

THE PRECENT OF POST CONSUMER WASTE TO INDUSTRIAL WASTE WILL VARY WITH AVAILAABILITY AND PROPERTY RETENTION NEEDS

COLOR, SHADE AND UNIFORMITY WILL VARY WITH THE MIX OF THE POST CONSUMER AND INDUSTRIAL WASTE MATERIALS

DIMENSIONS SHOWN ARE NOMINAL - ACTUAL SIZE WILL VARY WITHIN ALLOWABLE TOLERANCE AND REQUIRED FIT

Not to Scale

DATE Oct. 2005	Spotsylvania County Department of Utilities	Polyethylene Manhole Adjustment Ring-Wedge	DRWG. NO.
REVISIONS			S1-B

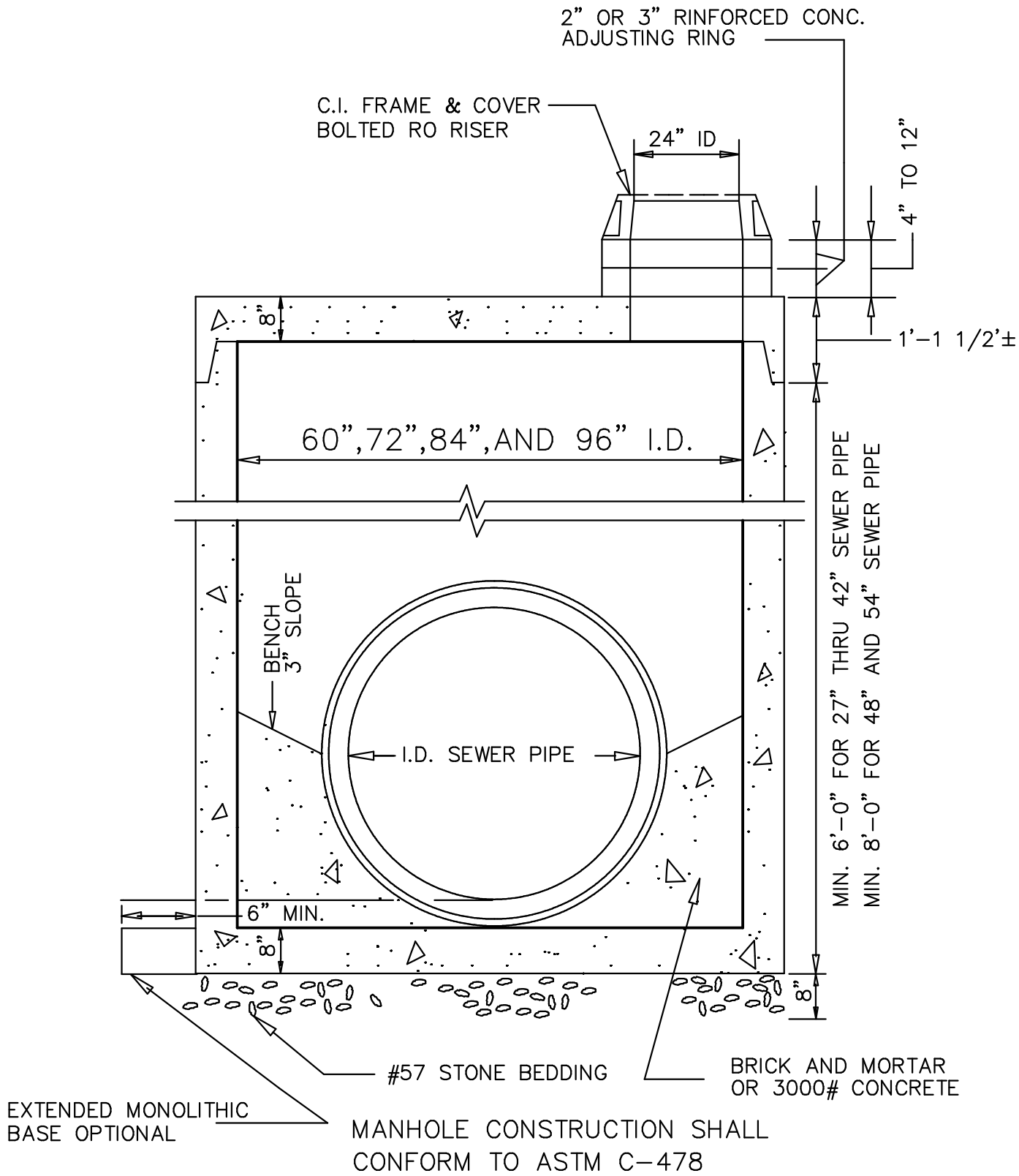

MANHOLE CONSTRUCTION SHALL
CONFORM TO ASTM C-478

Not to Scale

DATE April 2013	Spotsylvania County Department of Utilities	Deep Manhole 18' or Deeper	DRWG. NO. S2
REVISIONS			

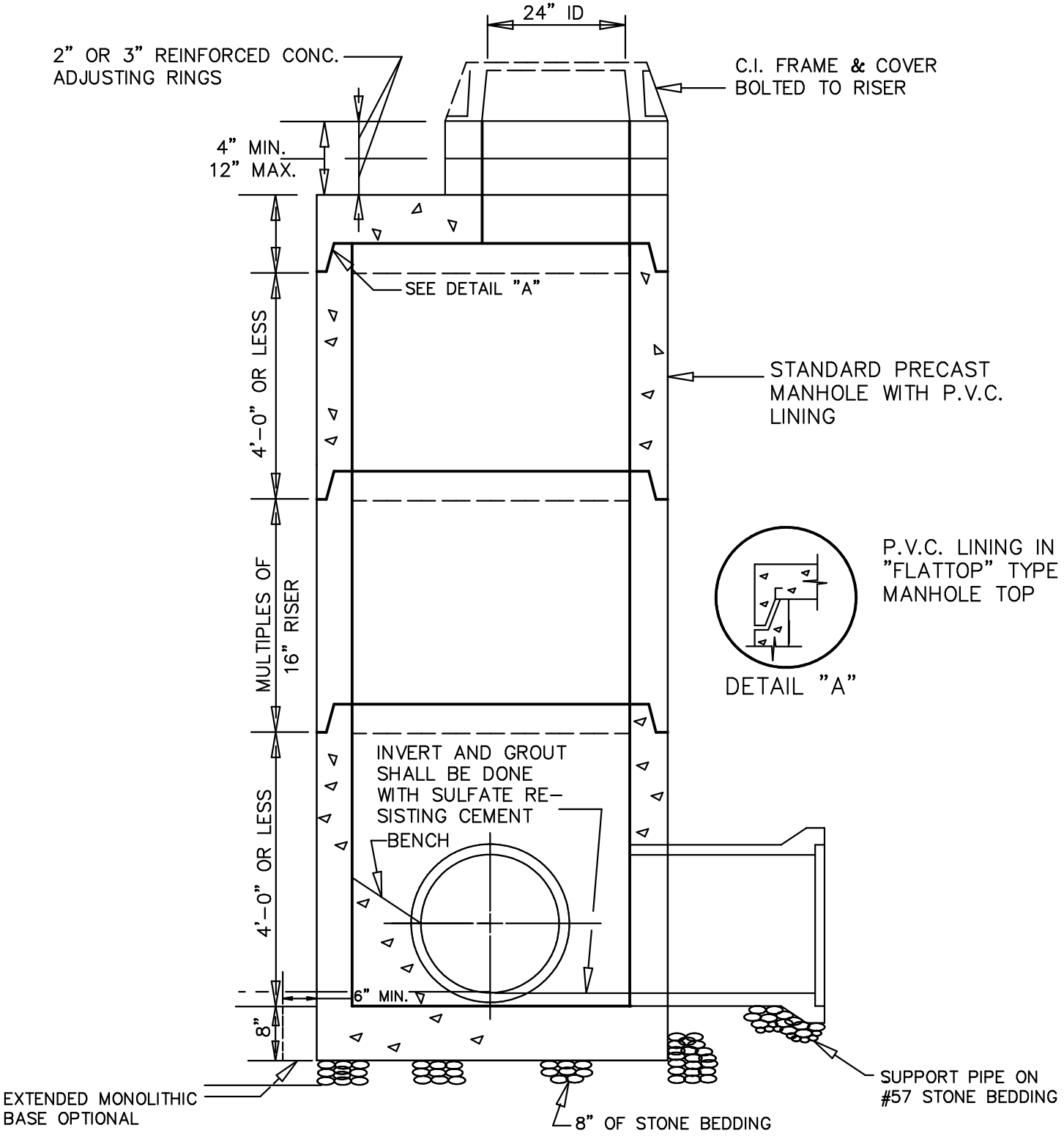

NOTE:

ACID-RESISTANT MANHOLES SHALL BE REQUIRED A MINIMUM OF 2000 FT. DOWNSTREAM OF FORCE MAIN DISCHARGE.

LINING SHALL BE PVC FABRIC EQUAL TO AMERON.

T-LOCK JOINTS SHALL BE WELDED ACCORDING TO LINER MANUFACTURER'S RECOMMENDATIONS.

Not to Scale

DATE April 2013	Spotsylvania County Department of Utilities	Acid Resistant Manhole	DRWG. NO.
REVISIONS			S3

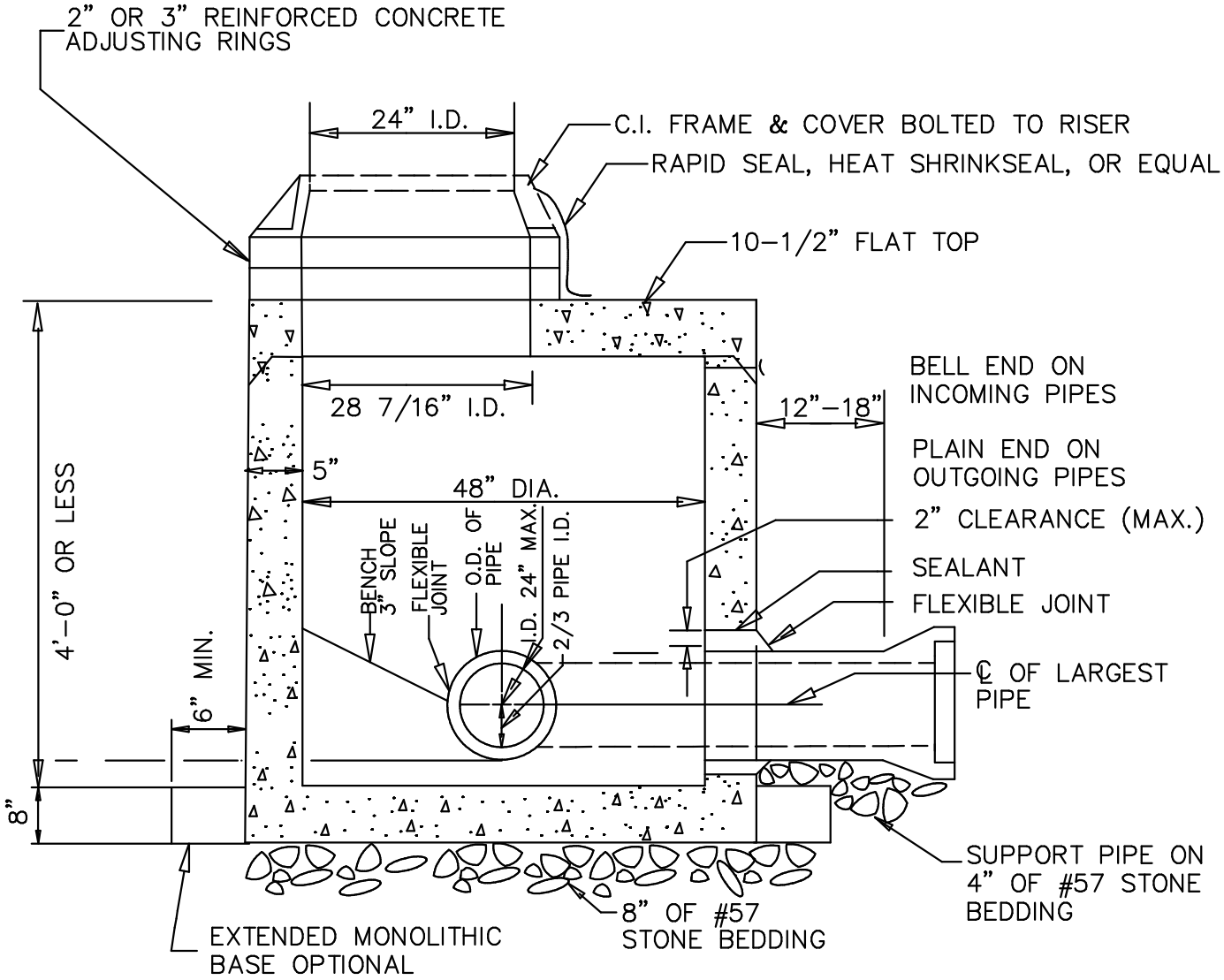

NOTES

1. EXTEND STONE BEDDING TO UNDISTURBED AREAS SURROUNDING THE MANHOLE.
2. BENCH MAY BE CONCRETE OR BRICK AND MORTAR.
3. PROVIDE REINFORCEMENT FABRIC PER ASTM A-185 (0.12 IN/FT).
4. MANHOLE CONSTRUCTION PER ASTM C-478.
5. PROVIDE JOINT MASTIC PER MANUFACTURER'S RECOMMENDATIONS.S
6. COAT MANHOLE INTERIOR WITH SIKAGARD 62 OR EQUAL.

Not to Scale

DATE April 2013	Spotsylvania County Department of Utilities	Shallow Manhole	DRWG. NO.
REVISIONS			S4

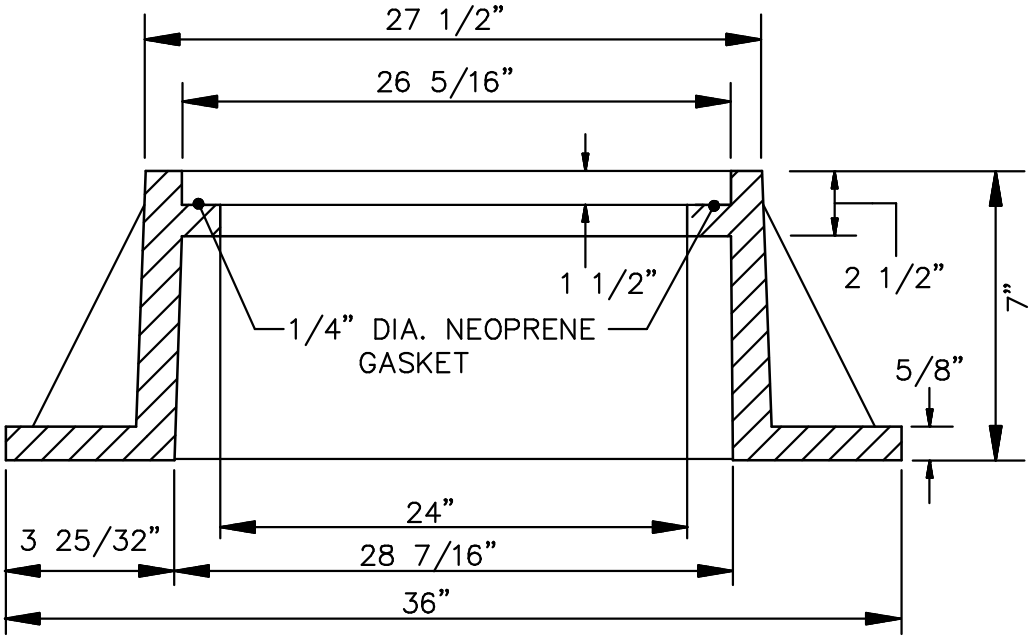

FRAME SECTION

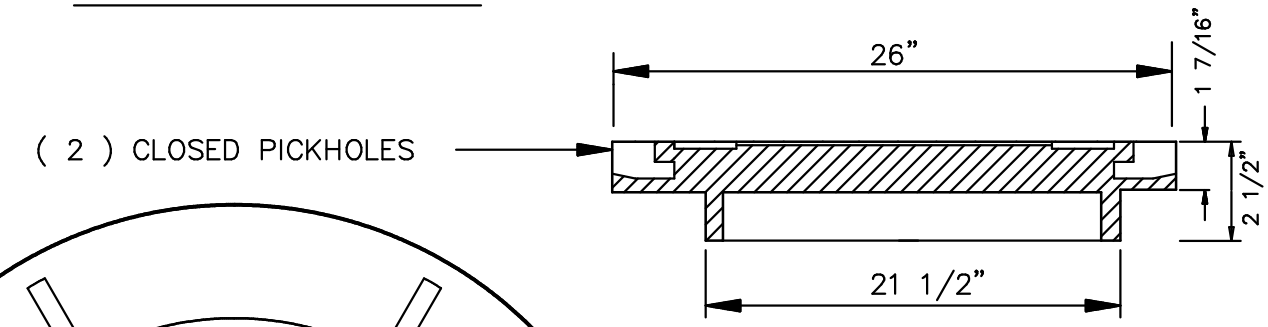

COVER SECTION

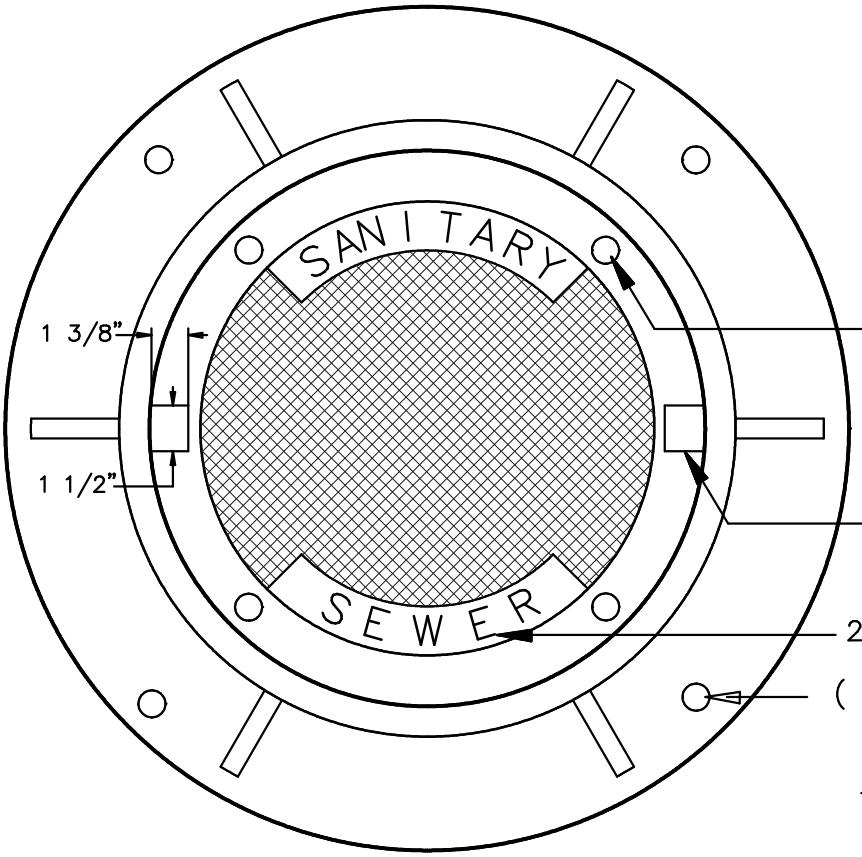

(4) 1" DIA. HOLES @ 32 3/4" DIA. BOLT CIRCLE

(2) CLOSED PICKHOLES

2" LETTERS (RECESSED FLUSH)

(4) 1" DIA. HOLES @ 32 3/4" DIA. BOLT CIRCLE

NOTE : FRAME AND COVER SHALL BE CAST IRON ASTM A-48 CLASS 30
SEATING SURFACE BETWEEN FRAME AND COVER SHALL BE MACHINED.

PLAN VIEW

Not to Scale

DATE April 2013	Spotsylvania County Department of Utilities	Manhole Frame and Cover	DRWG. NO.
REVISIONS			S5

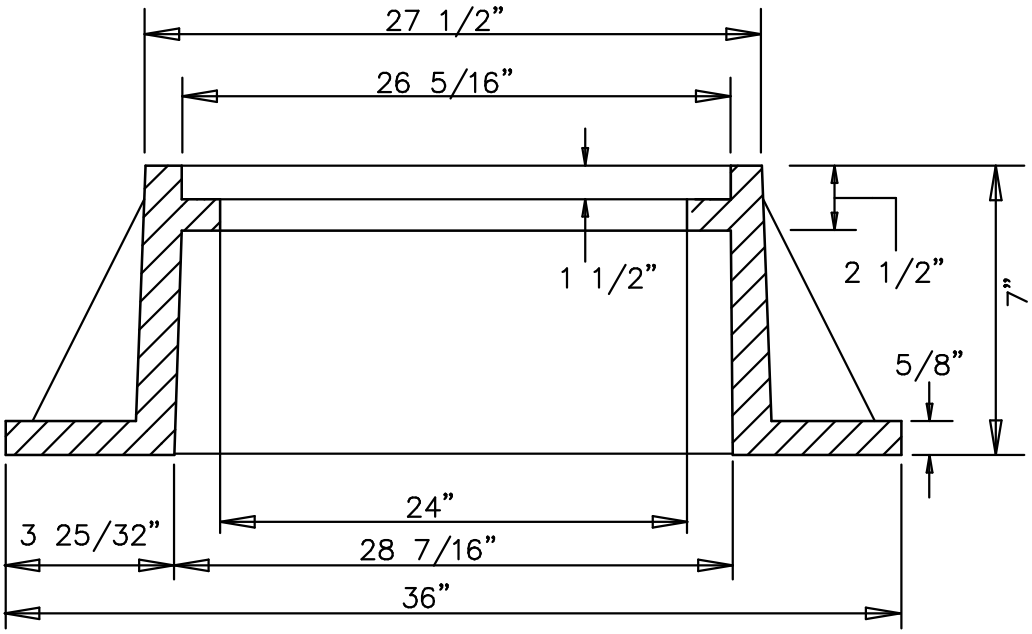

FRAME SECTION

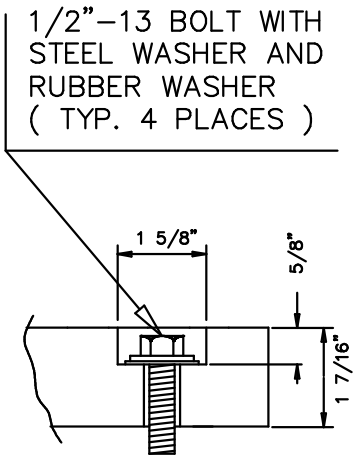

BOLT DETAIL

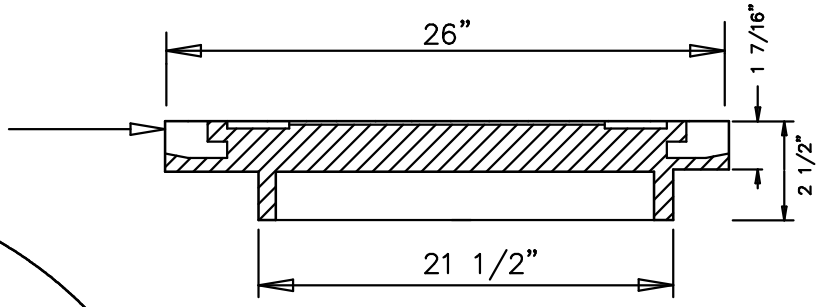

COVER SECTION

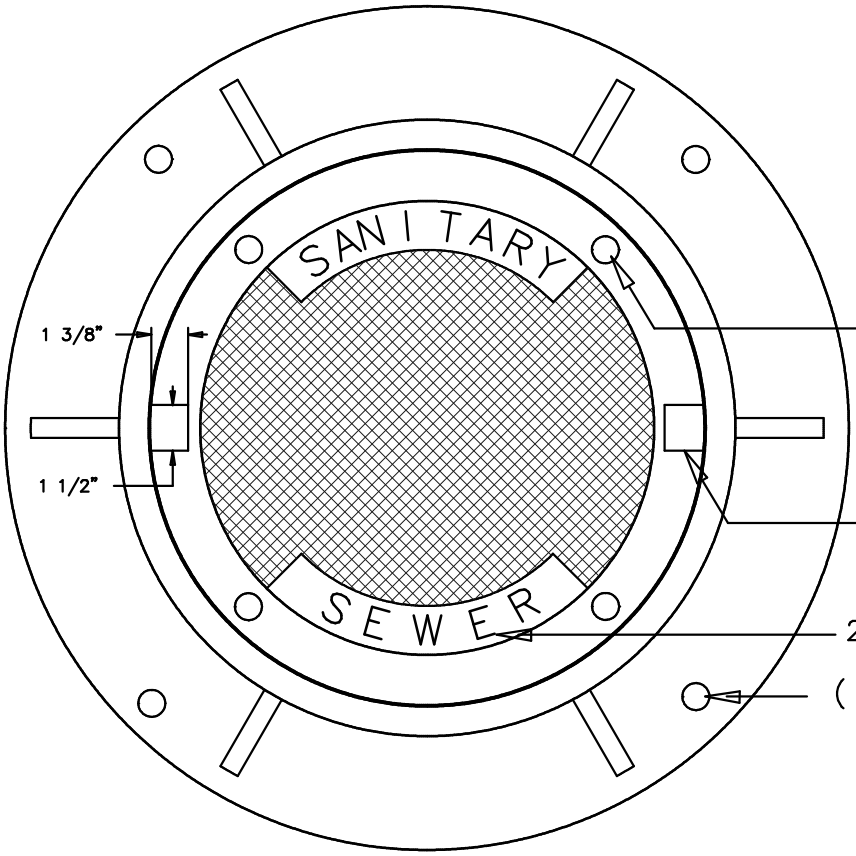

(4) 1/2–13 X 1 3/4" HEX SS CAP SCREW W/ 1/2" ZINC PLATED WASHERS

(2) CLOSED PICKHOLES

2" LETTERS (RECESSED FLUSH)

(4) 1" DIA. HOLES @ 32 3/4" DIA. BOLT CIRCLE

PLAN VIEW

NOTE : FRAME AND COVER SHALL BE CAST IRON ASTM A–48 CLASS 30
SEATING SURFACE BETWEEN FRAME AND COVER SHALL BE MACHINED.

Not to Scale

DATE April 2013	Spotsylvania County Department of Utilities	Bolt Down (Vandal Proof) Manhole Frame and Cover	DRWG. NO. S6
REVISIONS			

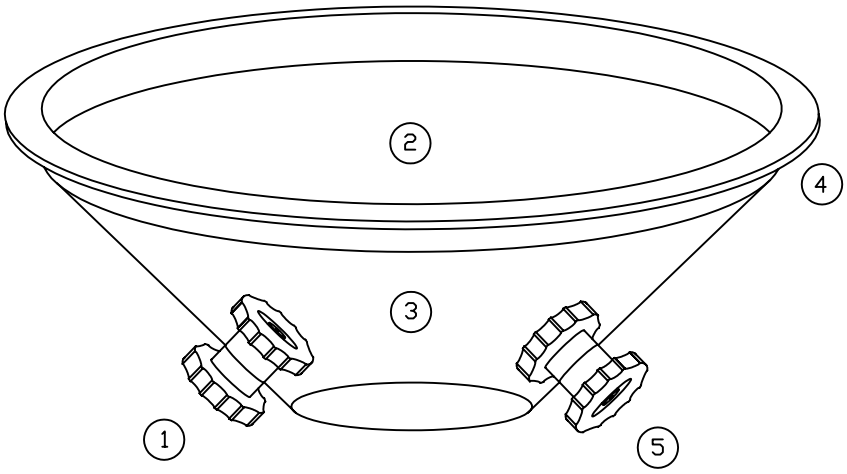

1. THE SPRING-LOADED GAS RELIEF VALVE IS DESIGNED TO RELIEVE THE GAS PRESSURE BUILD-UP. THE VALVE IS AUTOMATICALLY ACTIVATED WHEN THE GAS PRESSURE DIFFERENTIAL IN THE MANHOLE REACHES APPROX. 1/2 P.S.I.. THIS PREVENTS DANGEROUS ACCUMULATION OF SEWER GASES BY VENTING THEM THROUGH THE WATER, SAND AND DEBRIS COLLECTED IN THE INSERT.

2. SEWER GUARD'S BOWL SHAPE IS SPECIALLY DESIGNED TO PROTECT THE INSERT VALVES WHEN THE MANHOLE COVER IS REMOVED. IN ADDITION THE SHAPE ALSO TRAPS AND HOLDS DIRT AND DEBRIS.

3. MADE OF SPECIALLY FORMULATED PLASTIC POLYMERS, THE INSERT WILL NOT CORRODE AND CANNOT BE DAMAGED BY SEWER GASES OR ROAD OILS.

4. THE CLOSED-CELL CROSSLINKED POLYETHYLENE GASKET, HEAT-WELDED UNDER THE LID CONFORMS TO IRREGULARITIES IN THE FRAME AND FORMS A TIGHT VIRTUALLY LEAKPROOF SEAL.

5. THE SPRING-LOADED VACUUM RELIEF VALVE RELIEVES VACUUM PRESSURE BUIL-UP. THIS VALVE IS ACTIVATED WHEN THE VACUUM PRESSURE DIFFERENTIAL REACHES APPROX. 2.25 P.S.I..

BOTH VALVES (1 AND 5) ARE SELF-CLEANING AND ARE MADE OF NON-CORRODIBLE MATERIAL. THEY ARE ALSO INTENDED TO BE USED AS HANDLES FOR REMOVING THE INSERT.

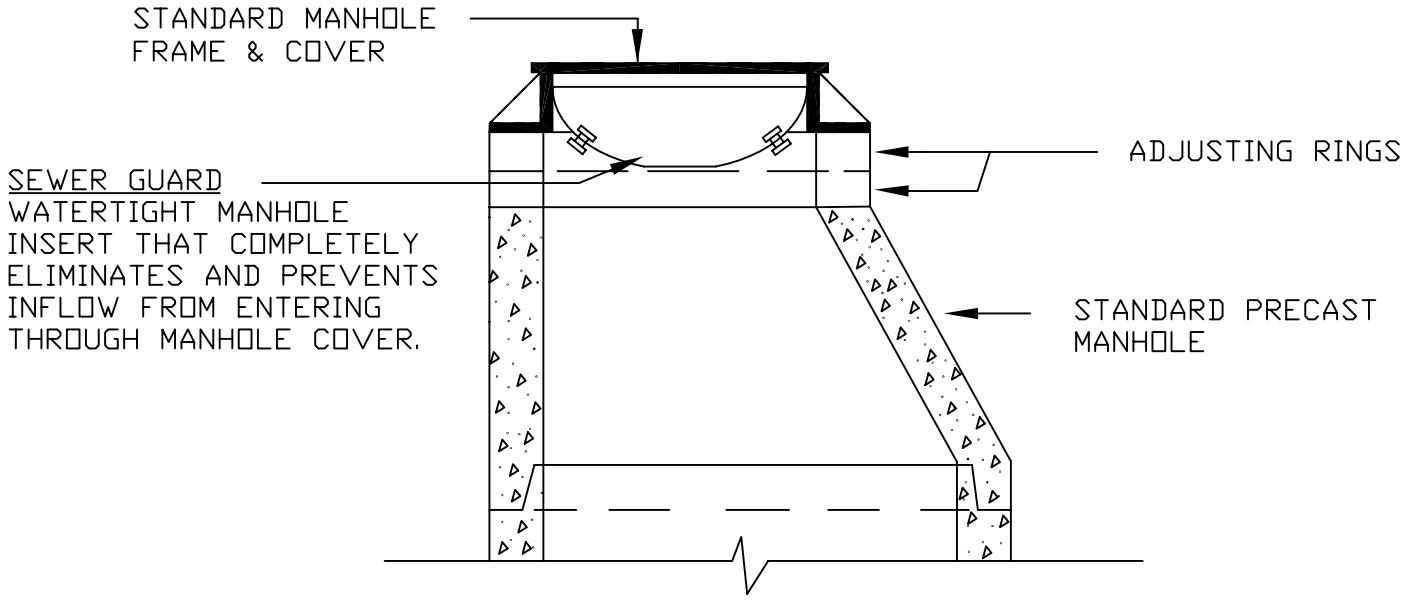

Not to Scale

DATE Oct. 2005	Spotsylvania County Department of Utilities	Watertight Manhole Insert	DRWG. NO. S6-A
REVISIONS			

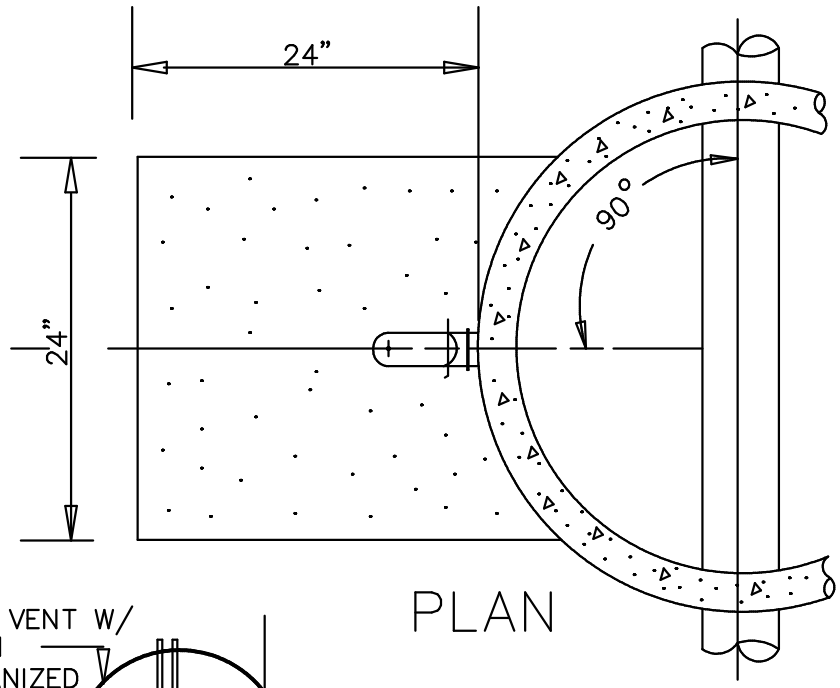

PLAN

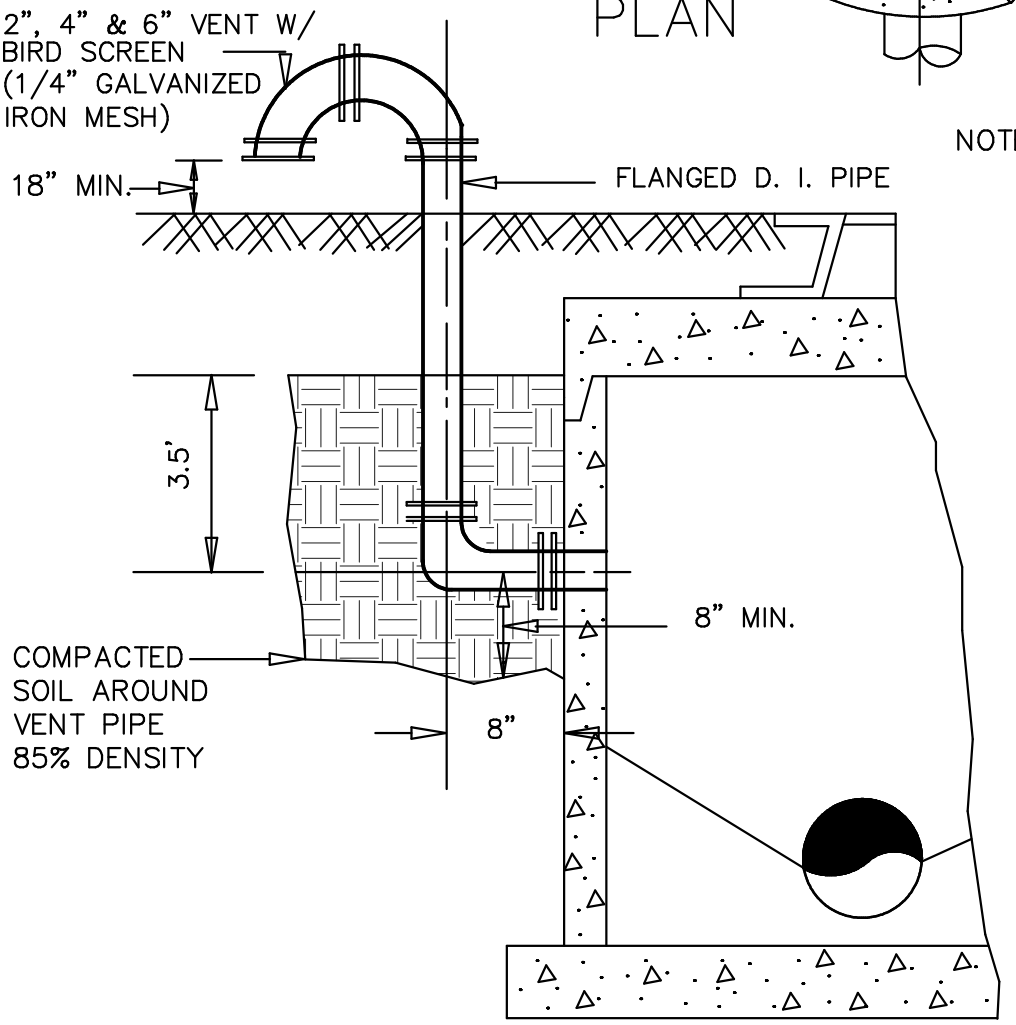

NOTE: PAINT EXPOSED PORTION OF PIPE WITH GREEN RUST INHIBITIVE PAINT.

NOTE: WHERE MANHOLE IS LOCATED IN FLOOD PLAIN, AIR VENT SHALL BE SET AT LEAST 12" ABOVE 100 YEAR FLOOD ELEVATION.

SECTION

Not to Scale

DATE April 2013	Spotsylvania County Department of Utilities	Manhole Air Vent	DRWG. NO. S7
REVISIONS			

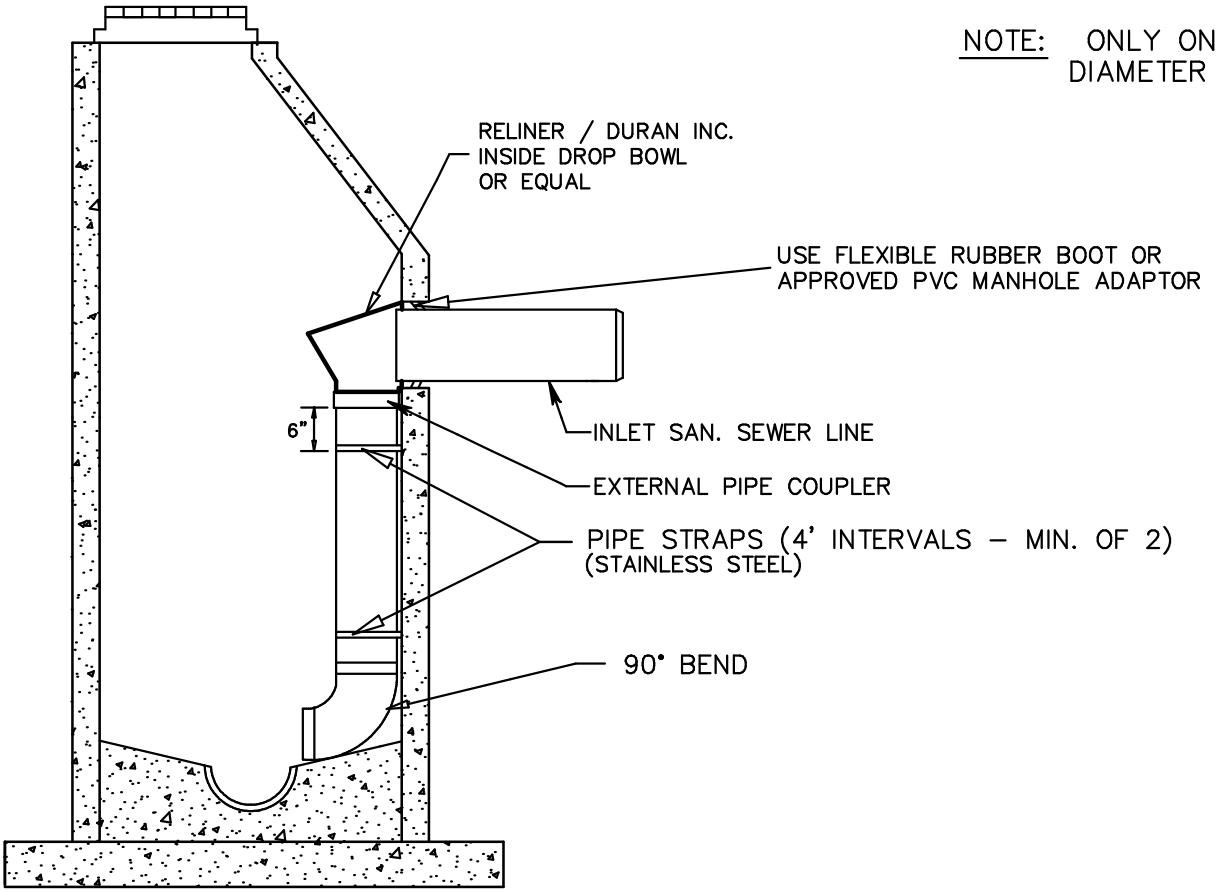

NOTE: ONLY ONE PER 48" DIAMETER MANHOLE.

(A) CHAMFER ON ALL PIPE SIZES TO BE AT A 15 DEGREE ANGLE.

(B) HEIGHT OF VERTICAL STACK WILL BE DETERMINED BY ENGINEER, BUT WILL NOT BE LESS THAN TWO FEET.

(C) DROP STACK TO BE 8" OR THE SAME AS THE MAIN LINE SDR 35 P.V.C. PIPE CONNECTED TO DROP FITTING WITH STANDARD GASKETED JOINT.

(D) VERTICAL STACK WILL BE STRAPPED TO MANHOLE AT PIPE JOINTS. STRAPS, BOLTS AND ANCHORS SHALL BE STAINLESS STEEL OR APPROVED MATERIAL NONCORRISIVE TO SEWER GASES.

(E) SHAPE INVERT AS NEEDED TO PROVIDE SMOOTH TRANSITION FROM DROP CONNECTION DISCHARGE POINT TO SPRING LINE OF MANHOLE INVERT.

(F) ELBOW AT BOTTOM OF THE STACK WILL BE A 90 DEGREE BEND POSITIONED IN THE DIRECTION OF THE FLOW IN MANHOLE WITH BENCH CONSTRUCTED TO CONFORM TO MANHOLE BENCH.

(G) DROP STACK SHALL NOT BE INSTALLED WITHIN 60 DEGREES OF THE ACCESS STEPS.

Not to Scale

DATE April 2013	Spotsylvania County Department of Utilities	Drop Manhole Interior	DRWG. NO. S8
REVISIONS			

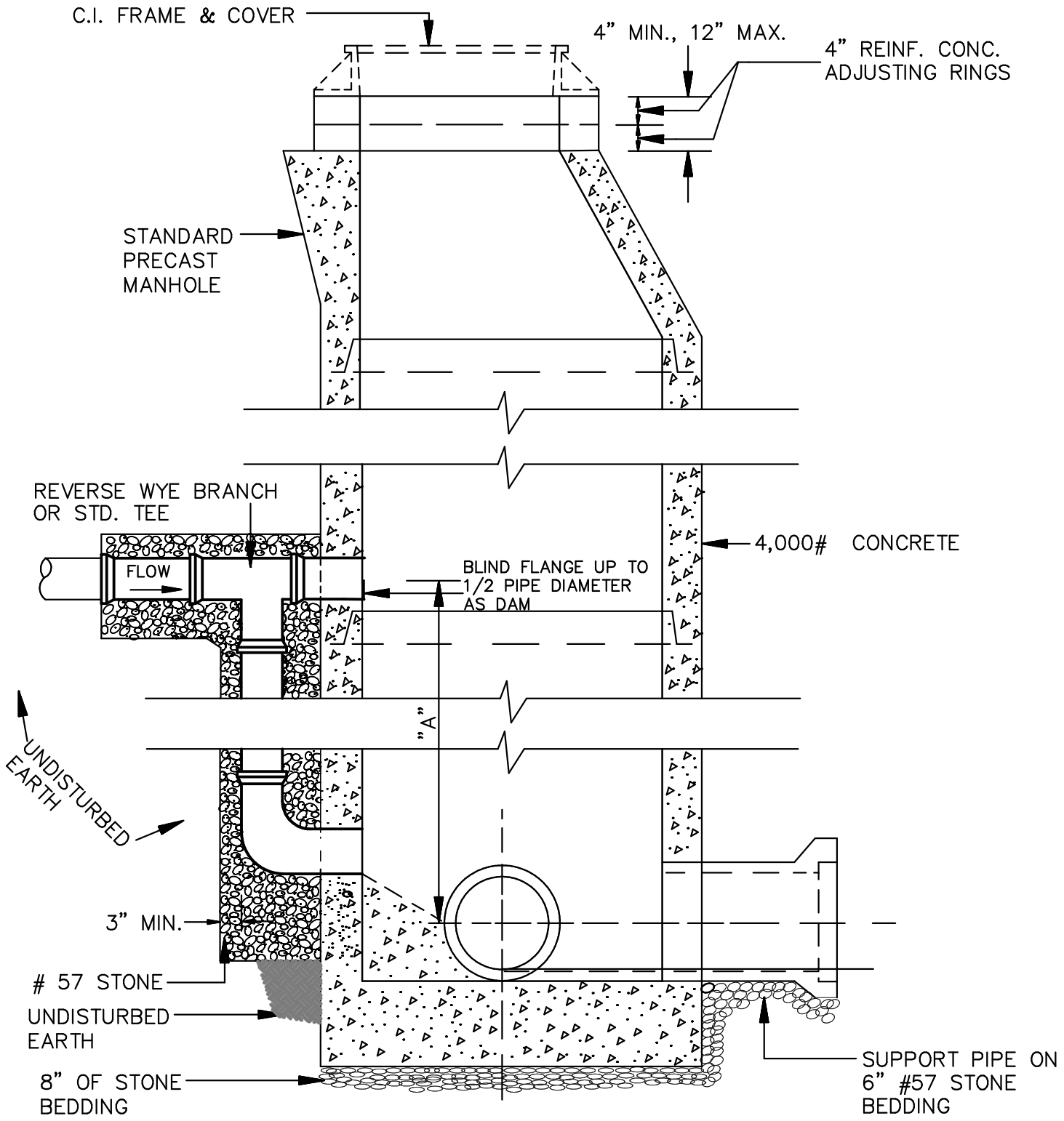

NOTE: WHERE "A" IS GREATER THAN OR EQUAL TO 2'-0" USE STANDARD DROP CONNECTION. COVER ALL DROPS WITH TAMPED # 57 STONE.

Not to Scale

DATE April 2013	Spotsylvania County Department of Utilities	Drop Manhole Exterior	DRWG. NO.
REVISIONS			S9

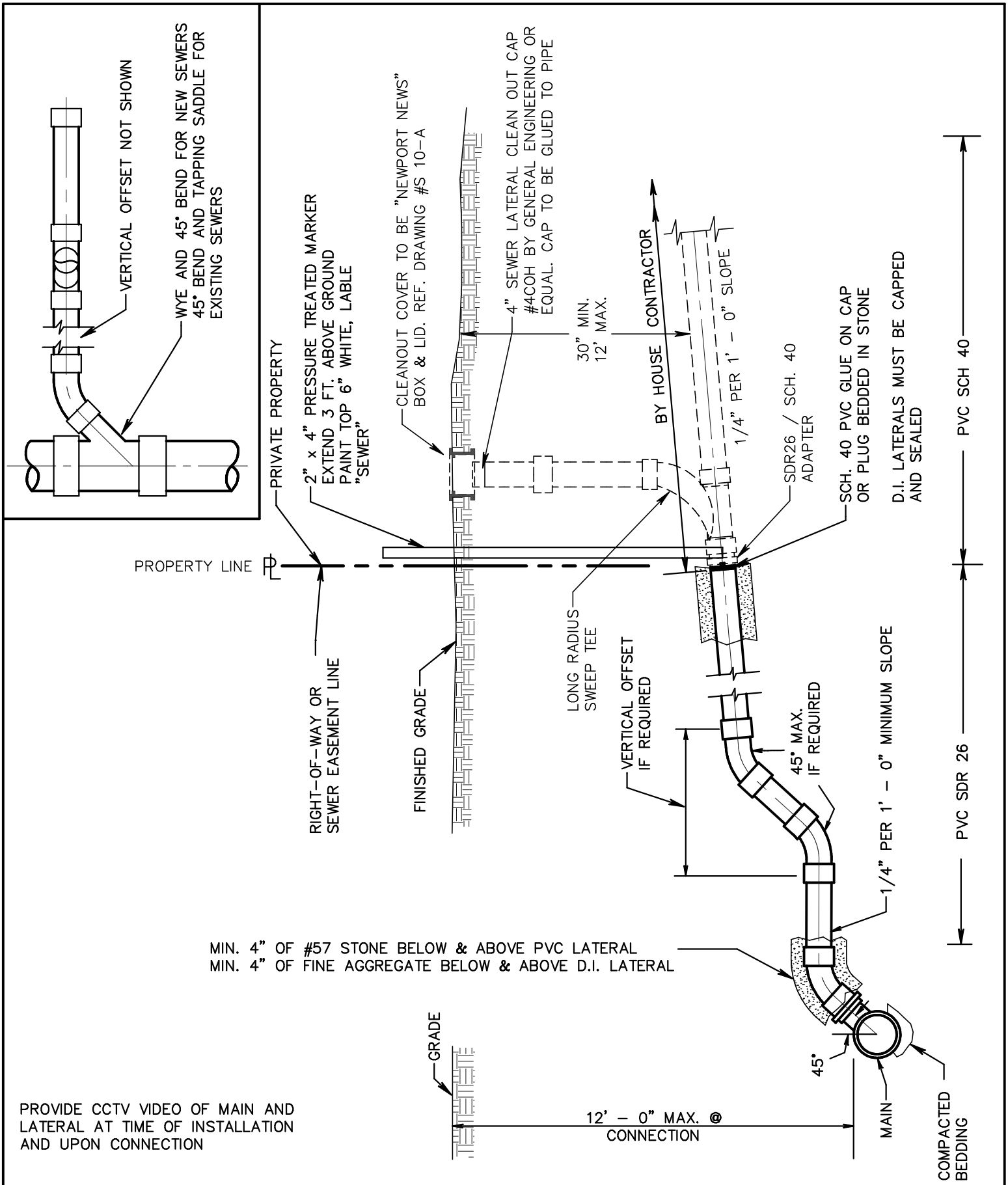

PROVIDE CCTV VIDEO OF MAIN AND LATERAL AT TIME OF INSTALLATION AND UPON CONNECTION

Not to Scale

DATE April 2013	Spotsylvania County Department of Utilities	Lateral Service Connection	DRWG. NO. S10
REVISIONS			

CAPITOL
FOUNDRY
OF VIRGINIA, INC.

2856 CRUSADER CIRCLE
VIRGINIA BEACH, VA. 23456
PHONE : (804) 427-9431
FAX : (804) 427-9308
TELEX : 903132 CAPFOD

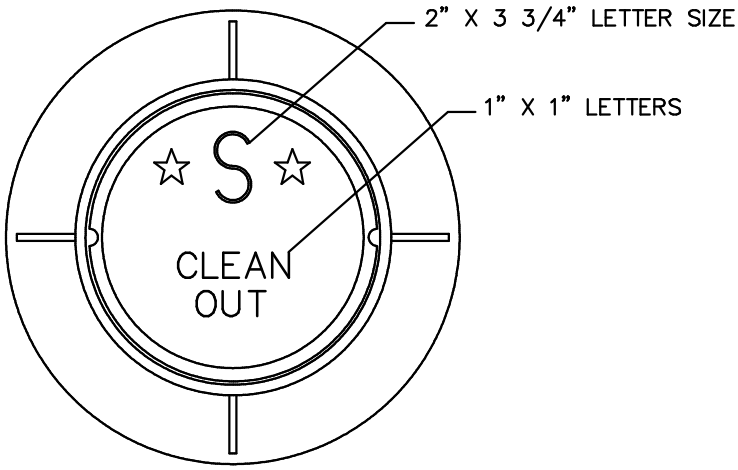

TOP VIEW

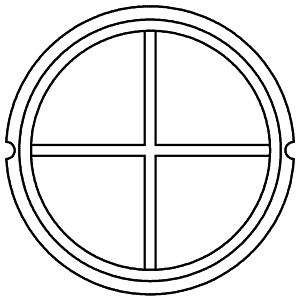

BOTTOM VIEW OF COVER

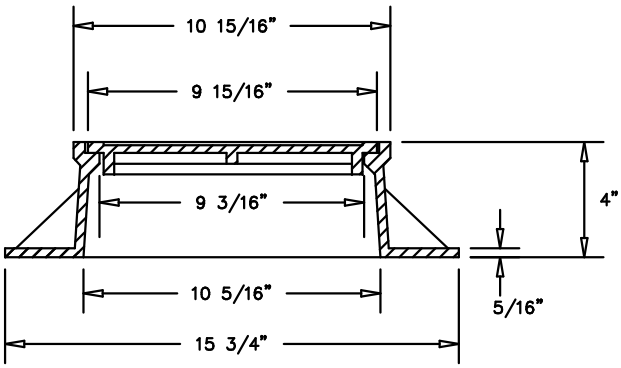

SECTION "A-A" VIEW

AVERAGE WEIGHT : 31#
FRAME : 23#
COVER : 8#

CAST IRON-ASTM #A-48 CLASS-30 B
FINISH-ASPHALT COATED

Not to Scale

DATE April 2013	Spotsylvania County Department of Utilities	Newport News Cleanout Box & Lid (Unpaved Areas)	DRWG. NO. S10-A
REVISIONS			

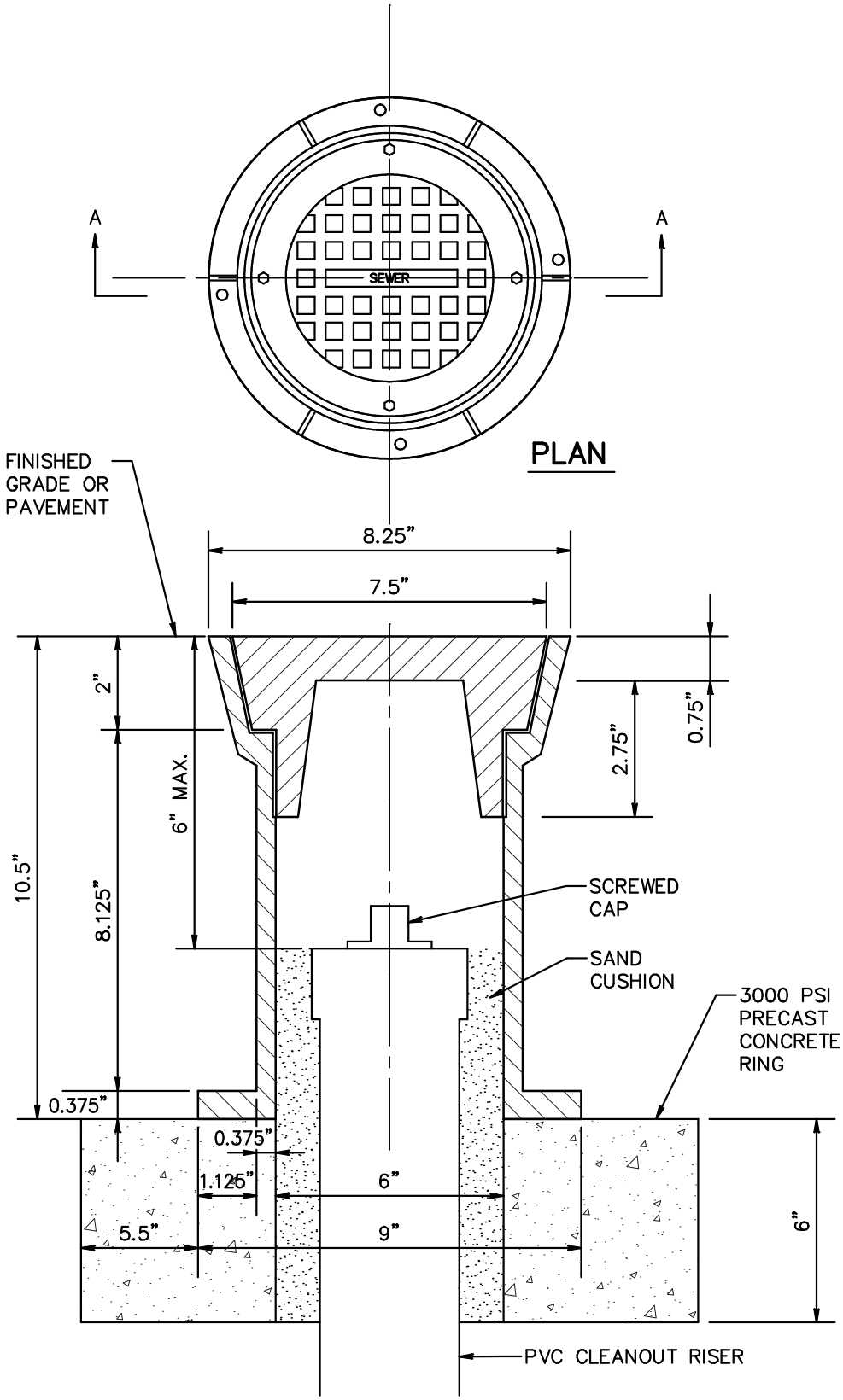

CONCRETE RING

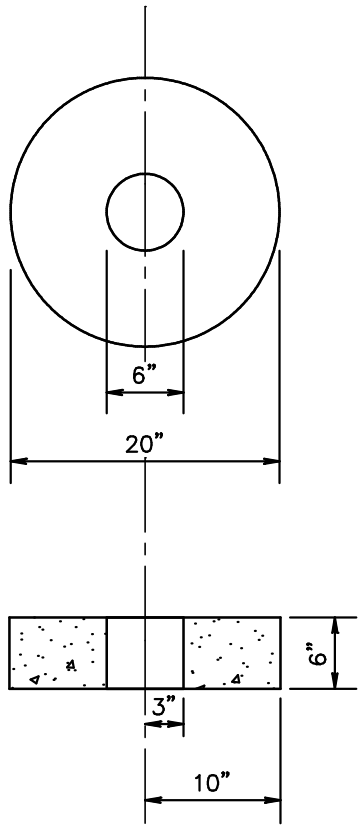

Not to Scale

DATE April 2013	Spotsylvania County Department of Utilities	Cleanout Cover For Paved Areas	DRWG. NO.
REVISIONS			S10–B

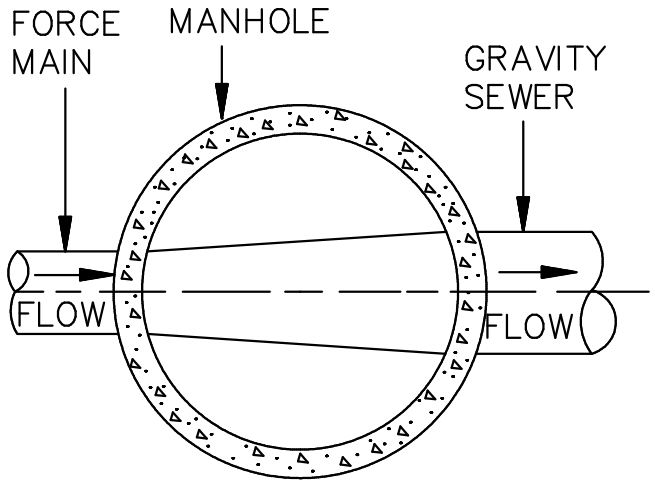

PLAN

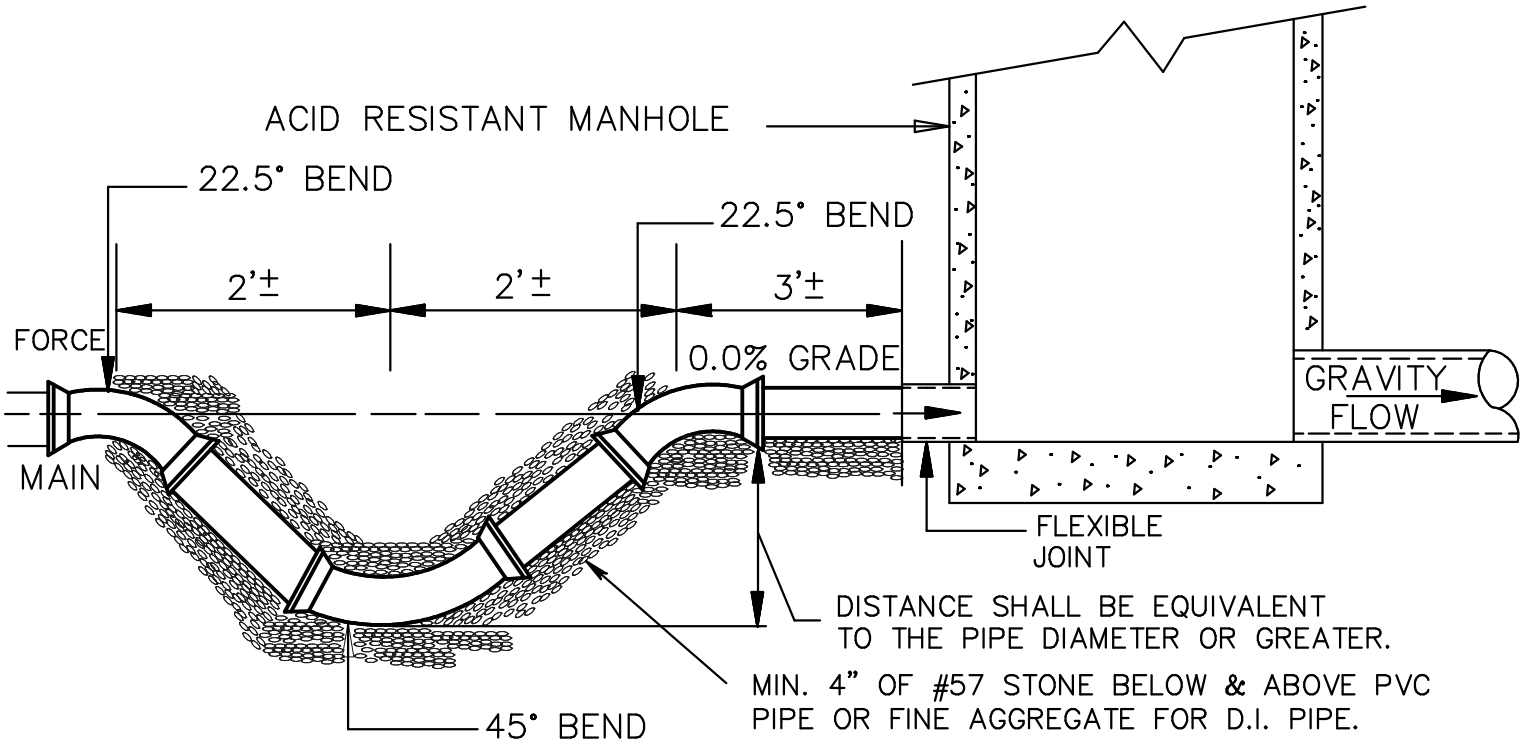

SECTION

NOTE: PROVIDE MANHOLE VENT.

Not to Scale

DATE April 2013	Spotsylvania County Department of Utilities	Force Main Discharge	DRWG. NO.
REVISIONS			S11

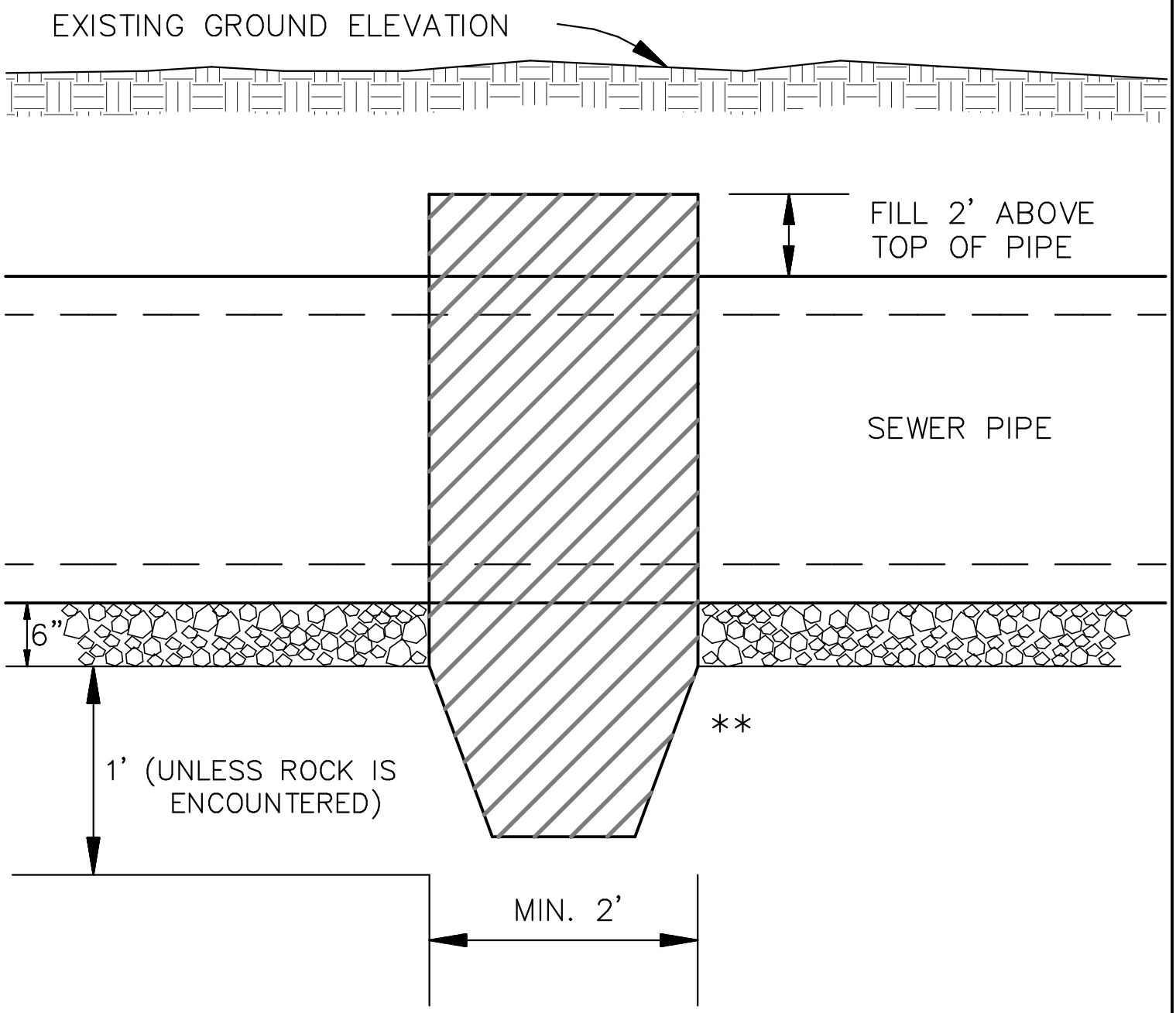

** CLAY DAM (MIN. IMPERVIOUSNESS=10^{-3} CM/SEC)
*ALTERNATE MATERIALS INCLUDE SOIL MIXED WITH CEMENT AND CONCRETE.
(MATERIALS TO BE APPROVED BY ENGINEER PRIOR TO PLACING.)

Not to Scale

DATE April 2013	Spotsylvania County Department of Utilities	Clay Dam	DRWG. NO.
REVISIONS			S12

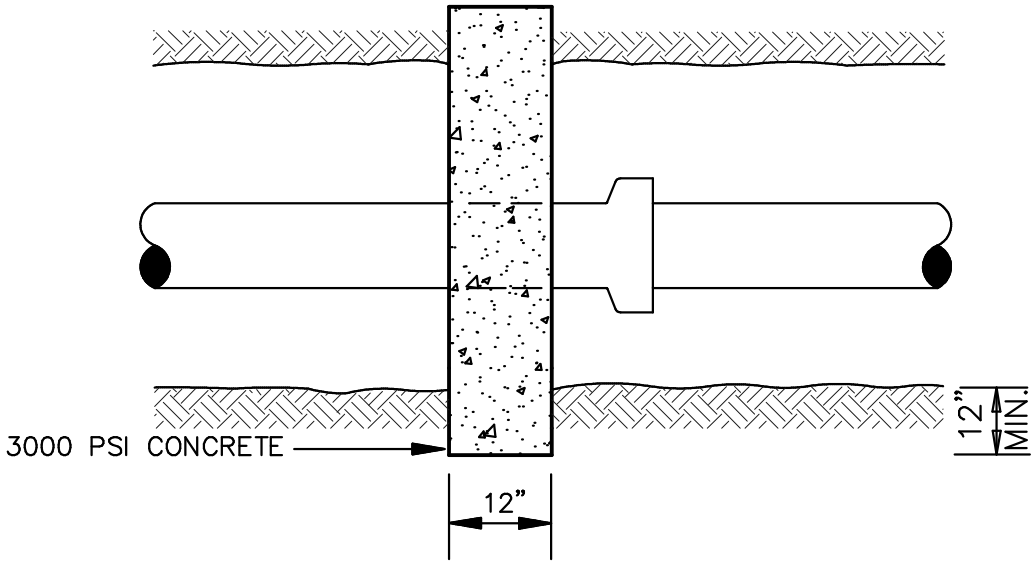

PLANS

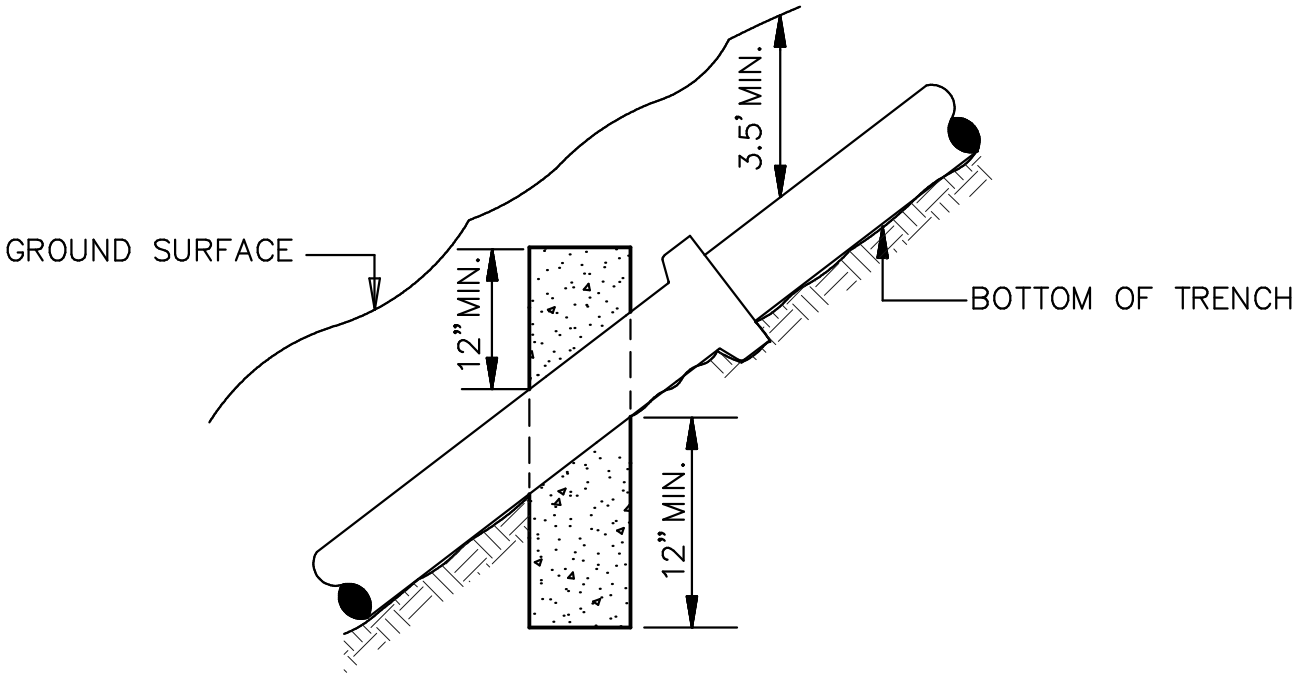

ELEVATIONS

NOTES:

1. CONCRETE TO BE POURED AGAINST UNDISTURBED EARTH.
2. SPACING OF ANCHORS:
   SLOPES : 20%–30% – EVERY 2 LENGTHS OF PIPE
   30%–50% – EVERY 1 1/2 LENGTHS OF PIPE
   OVER 50% – EVERY LENGTH OF PIPE

Not to Scale

DATE April 2013	Spotsylvania County Department of Utilities	Sewer Anchorage	DRWG. NO.
REVISIONS			S13

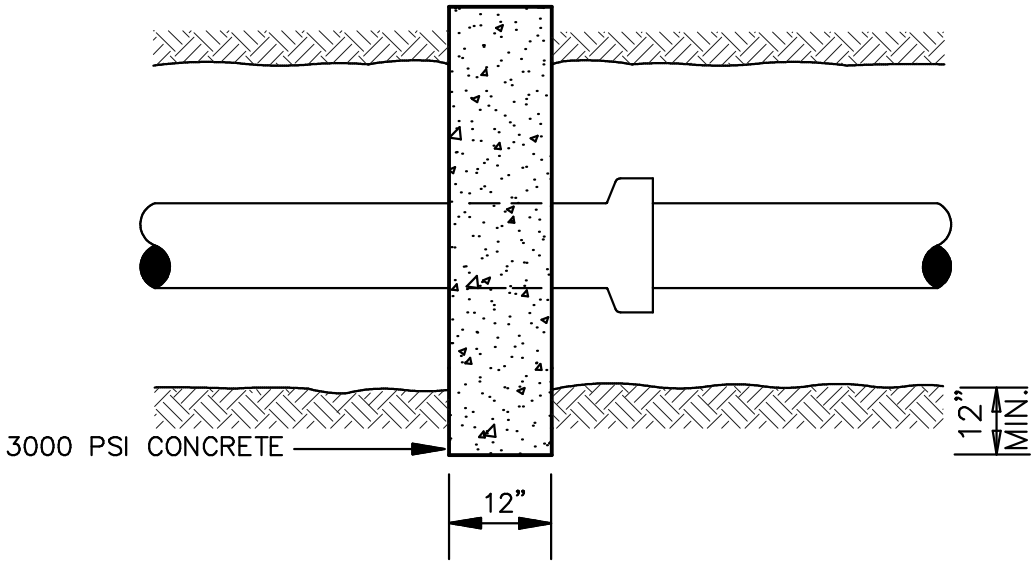

PLANS

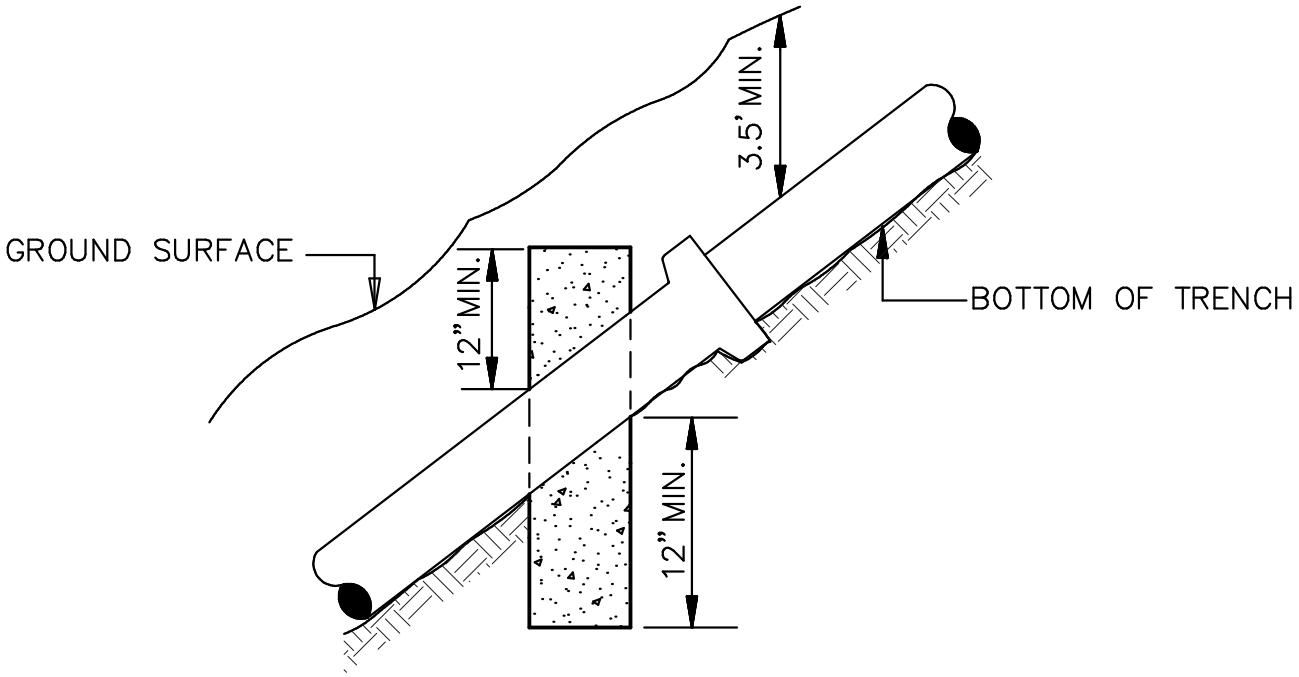

ELEVATIONS

NOTES:

1. CONCRETE TO BE POURED AGAINST UNDISTURBED EARTH.
2. SPACING OF ANCHORS:
   SLOPES : 20%–30% – EVERY 2 LENGTHS OF PIPE
   30%–50% – EVERY 1 1/2 LENGTHS OF PIPE
   OVER 50% – EVERY LENGTH OF PIPE

Not to Scale

DATE April 2013	Spotsylvania County Department of Utilities	Sewer Anchorage	DRWG. NO.
REVISIONS			S13

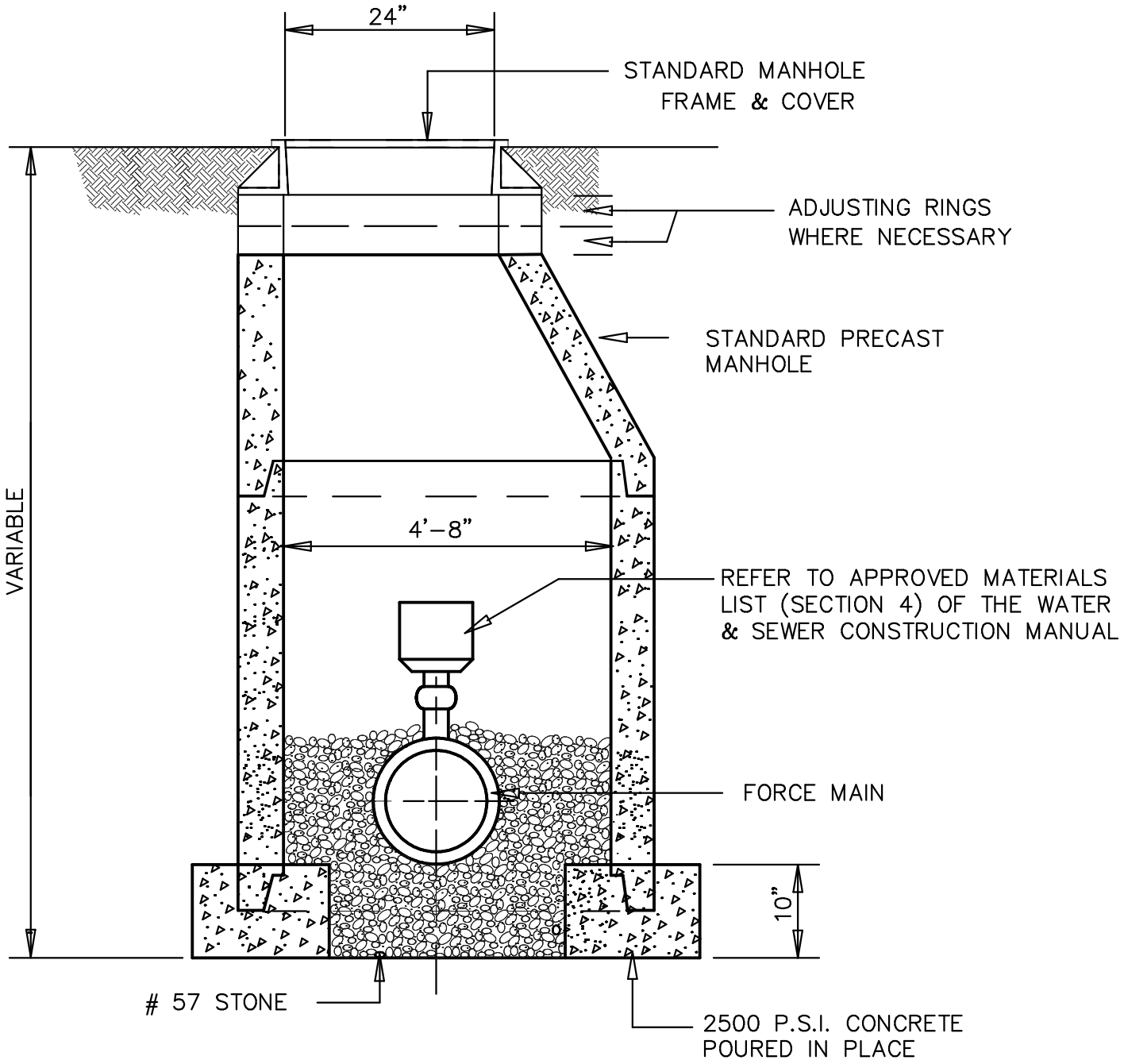

Not to Scale

DATE April 2013	Spotsylvania County Department of Utilities	Sewer Air Release/Vacuum Valve Setting	DRWG. NO. S14
REVISIONS			

to be used with:
figures 21, 22, 23 & 24

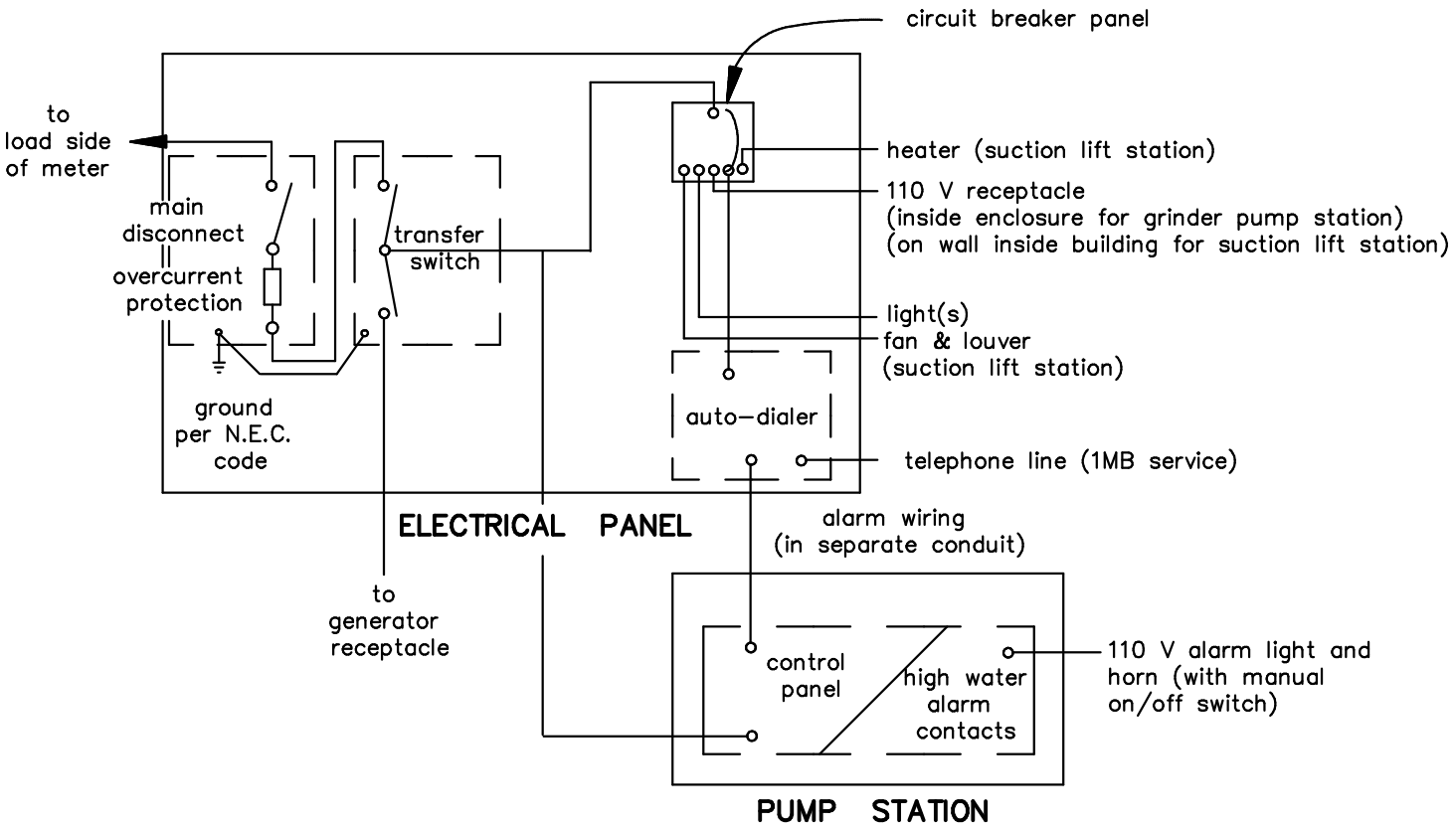

OVERALL WIRING

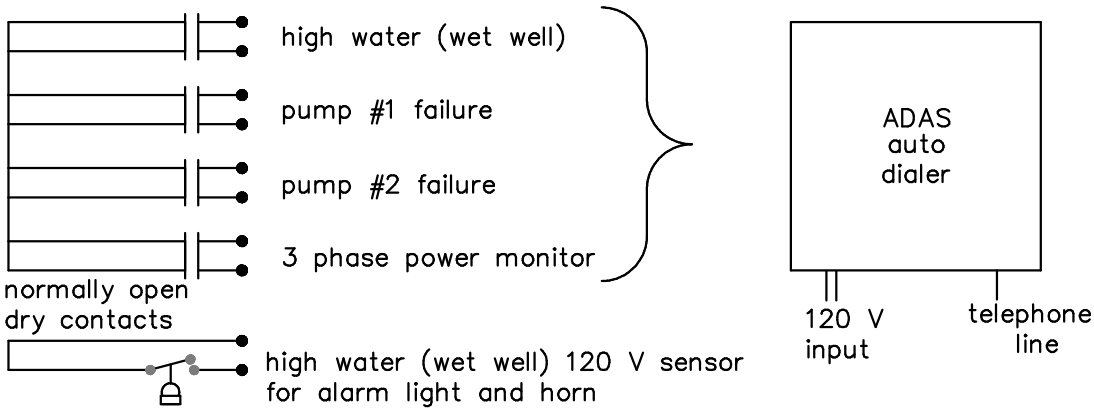

AUTO DIALING ALARM

Not to Scale

DATE April 2013	Spotsylvania County Department of Utilities	Sewer Pump Station Typical Wiring Diagrams Figure 20	DRWG. NO. S15
REVISIONS			

to be used with:
figures 20, 22, 23 & 24

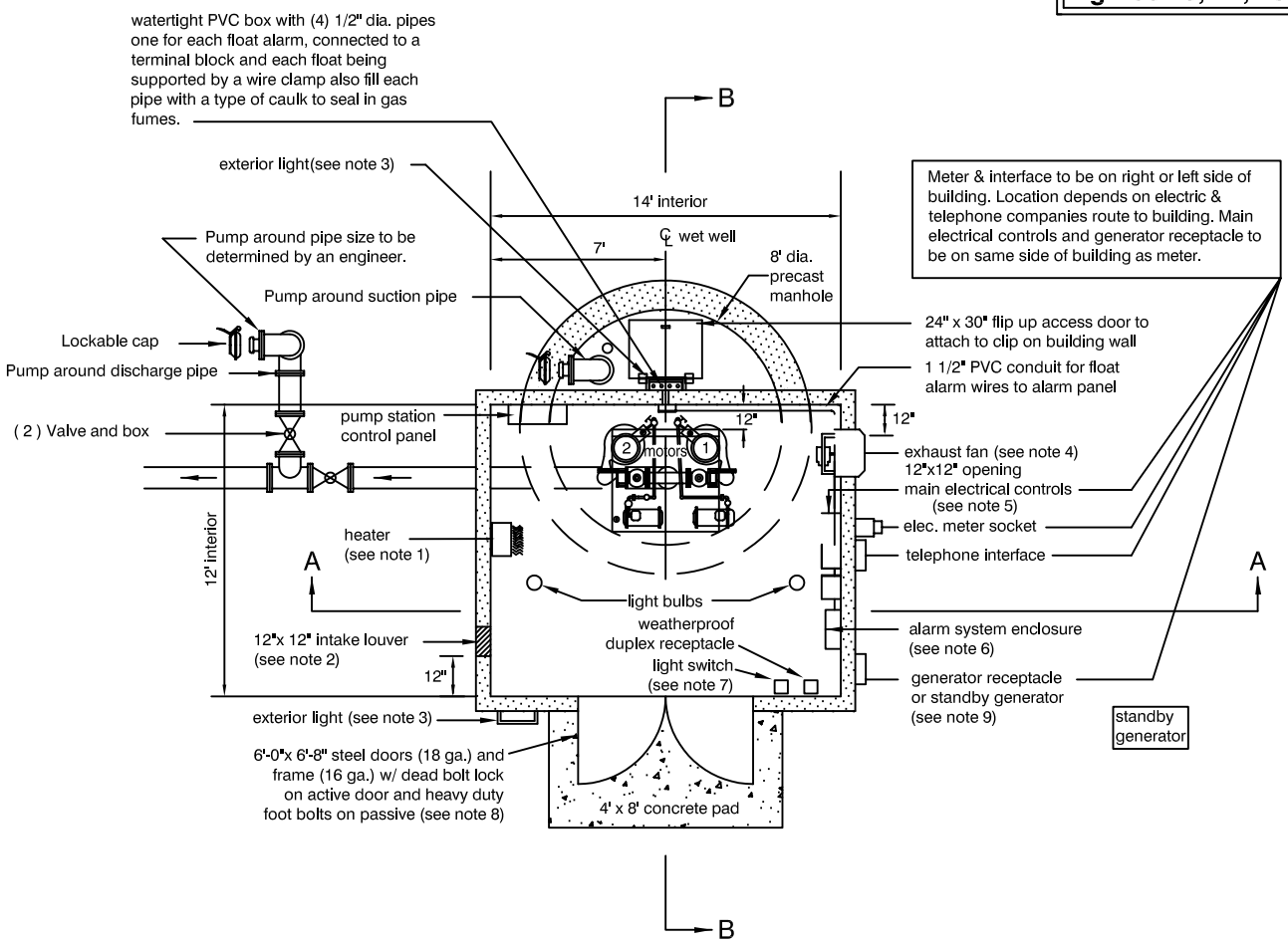

NOTES:

1. Heater shall be Markel model F3422, or FCSA approved equal. Provide with integral thermostat and surface mount accessories.

2. Louver shall be Ruskin model L745 (12"x12") or FCSA approved equal. Electric operator for louver shall be interlocked with exhaust fan.

3. Exterior light shall be American Electric, model E52-70C, or FCSA approved equal.

4. Exhaust fan shall be Chelsea WDC catalog No. WDC80XB-01, or FCSA approved equal, controlled by remote wall mounted switch. Provide fan with motorized damper in conjunction w/fan operation.

5. Main disconnect, double throw switch, circuit breaker panel.

6. Alarm system shall be ADAS DiaLog autodialer.

7. Switch to operate lights & fan simultaneously.

8. Lockset to be kwik set 880-26D single cylinder w/ thumb latch deadbolt.

9. Generator receptacle shall be Russellstoll SCB7334-72, or standby generator. Also if pump station exceeds 500 GPM a standby generator is required.

Not to Scale

DATE Oct. 2005	Spotsylvania County Department of Utilities	Sewer Pump Station Plan View Figure 21	DRWG. NO. S16
REVISIONS			

to be used with:
figures 20, 21, 23 & 24

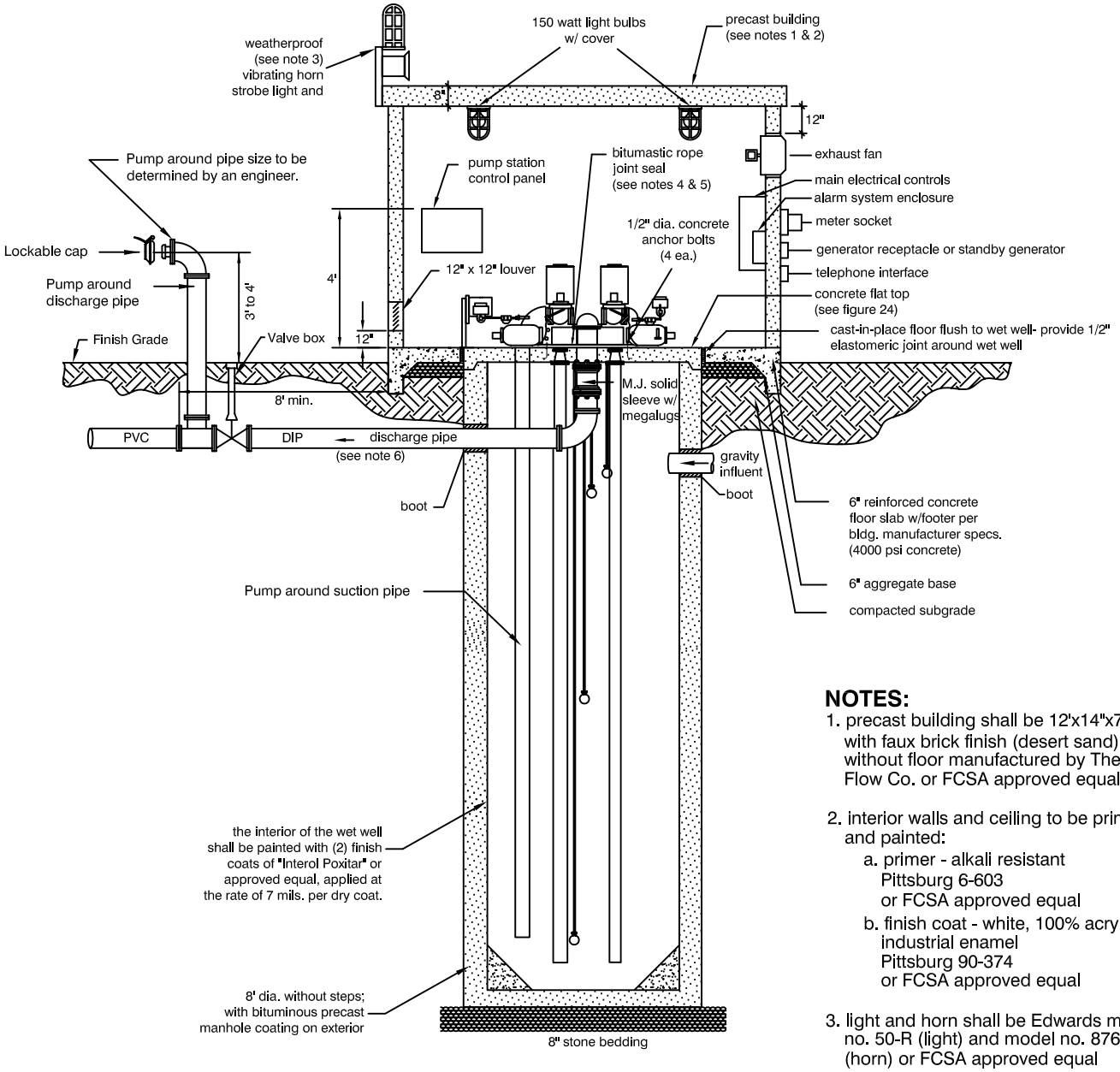

NOTES:

1. precast building shall be 12'x14"x7'-6", with faux brick finish (desert sand), without floor manufactured by The Clear Flow Co. or FCSA approved equal

2. interior walls and ceiling to be primed and painted:
   a. primer - alkali resistant
      Pittsburg 6-603
      or FCSA approved equal
   b. finish coat - white, 100% acrylic
      industrial enamel
      Pittsburg 90-374
      or FCSA approved equal

3. light and horn shall be Edwards model no. 50-R (light) and model no. 876-N5 (horn) or FCSA approved equal

4. a gas tight seal must be provided between pumping station base plate and wet well flat top

5. a hydrogen sulfide inhibiter must be applied to pumping station base plate bottom and all exposed pipes and fittings.

6. force main discharge must not run under the wall with electrical panels, front concrete slab or through the access door area.

Not to Scale

DATE Oct. 2005	Spotsylvania County Department of Utilities	Sewer Pump Station Cross Section View "A–A" Figure 22	DRWG. NO. S17
REVISIONS			

to be used with:
figures 20, 21, 22 & 24

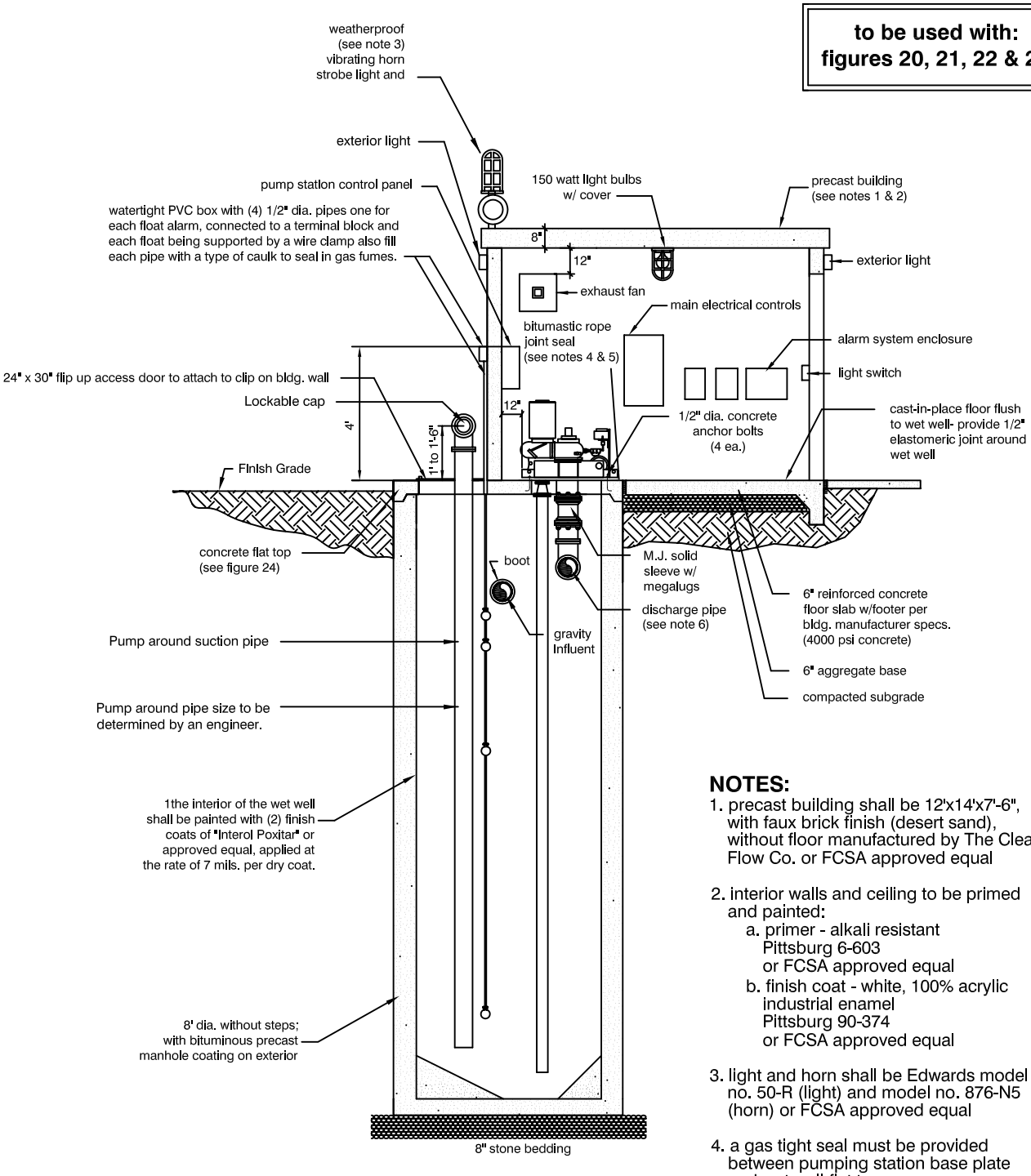

NOTES:

1. precast building shall be 12'x14'x7'-6", with faux brick finish (desert sand), without floor manufactured by The Clear Flow Co. or FCSA approved equal

2. interior walls and ceiling to be primed and painted:
   a. primer - alkali resistant
      Pittsburg 6-603
      or FCSA approved equal
   b. finish coat - white, 100% acrylic industrial enamel
      Pittsburg 90-374
      or FCSA approved equal

3. light and horn shall be Edwards model no. 50-R (light) and model no. 876-N5 (horn) or FCSA approved equal

4. a gas tight seal must be provided between pumping station base plate and wet well flat top

5. a hydrogen sulfide inhibiter must be applied to pumping station base plate bottom and all exposed pipes and fittings.

6. force main discharge must not run under the wall with electrical panels, front concrete slab or through the access door area.

Not to Scale

DATE Oct. 2005	Spotsylvania County Department of Utilities	**Sewer Pump Station** Cross Section View "B–B" Figure 23	DRWG. NO. S18
REVISIONS			

to be used with:
figures 20, 21, 22 & 23

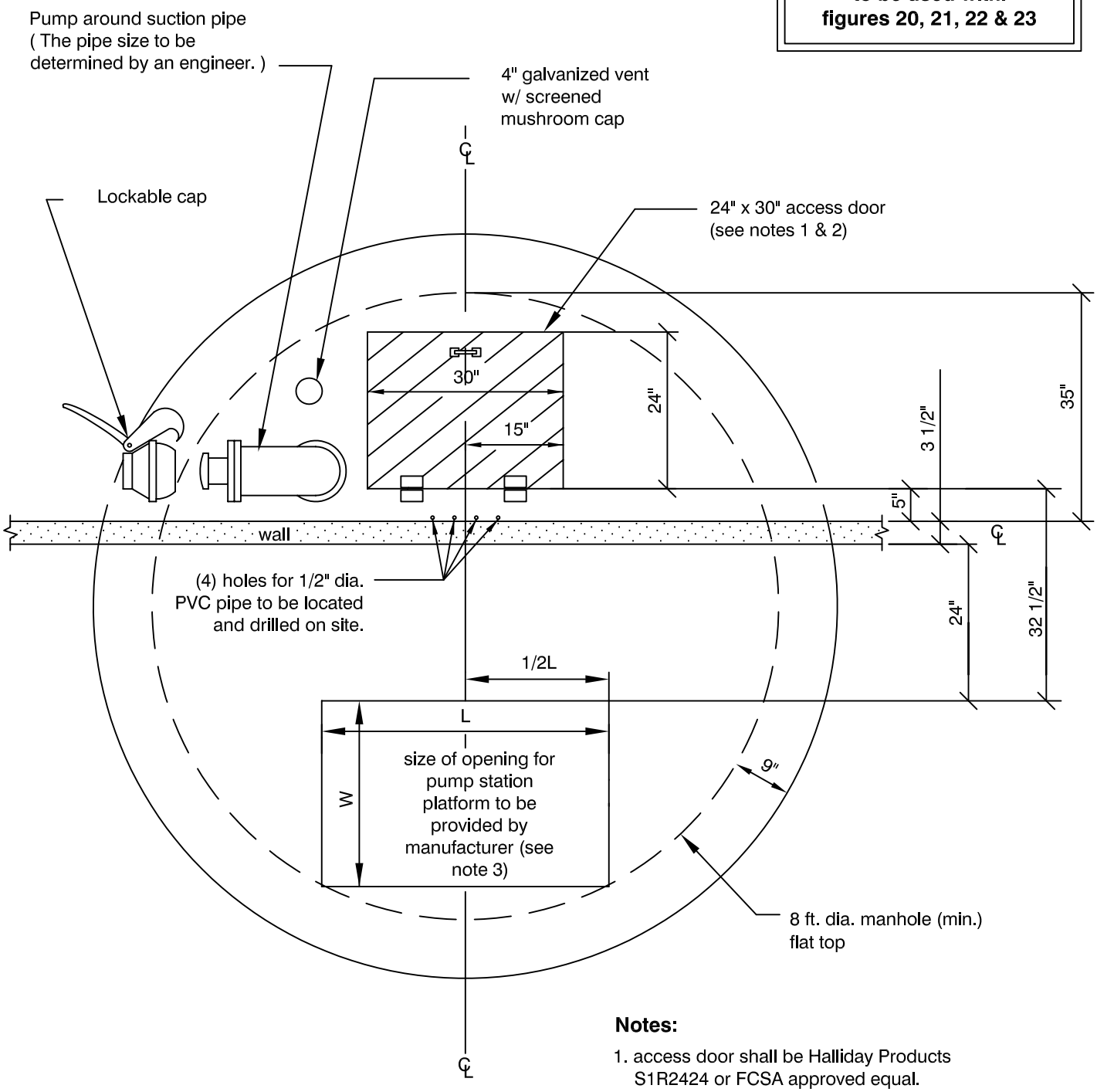

Notes:

1. access door shall be Halliday Products S1R2424 or FCSA approved equal.
2. access door to flip up against rear wall and held in place with a clip assembly.
3. manufacturer will need to specify which dimension is parallel to wall and which one is perpendicular to wall.

Not to Scale

DATE Oct. 2005	Spotsylvania County Department of Utilities	Sewer Pump Station Wet Well Cover Figure 24	DRWG. NO. S19
REVISIONS			

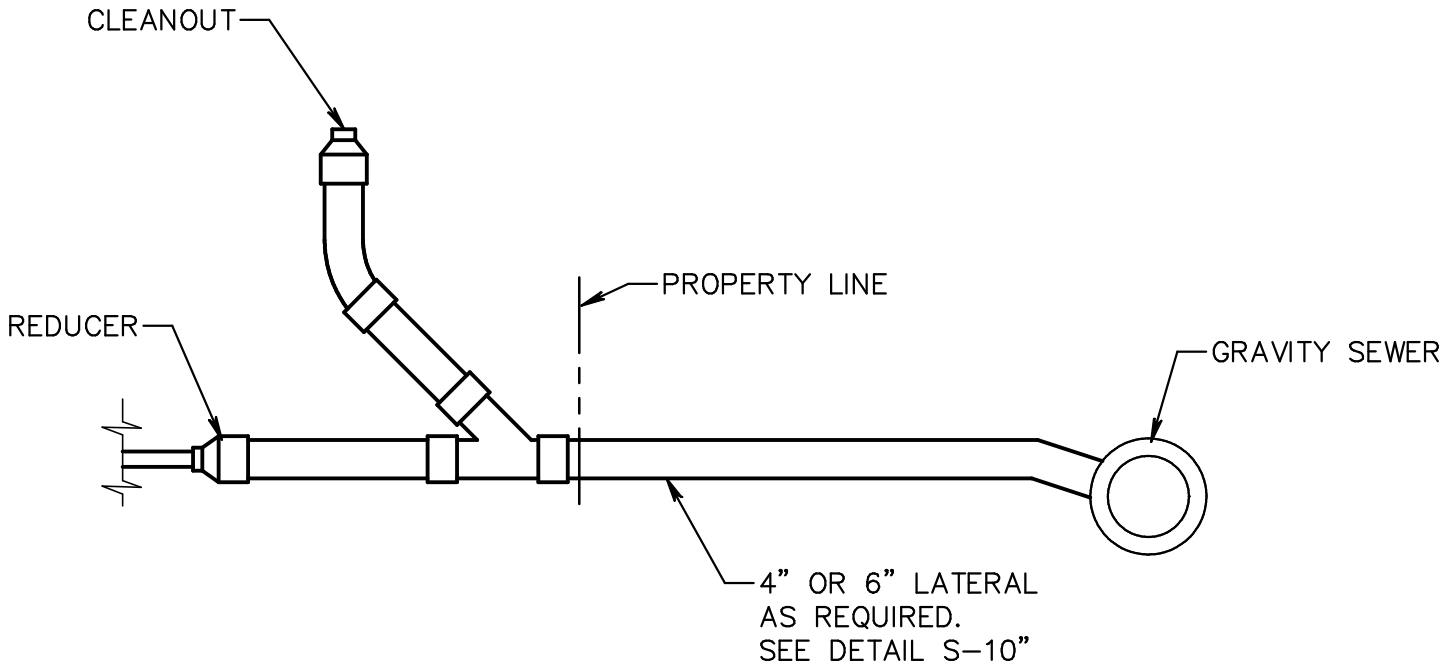

SECTION VIEW

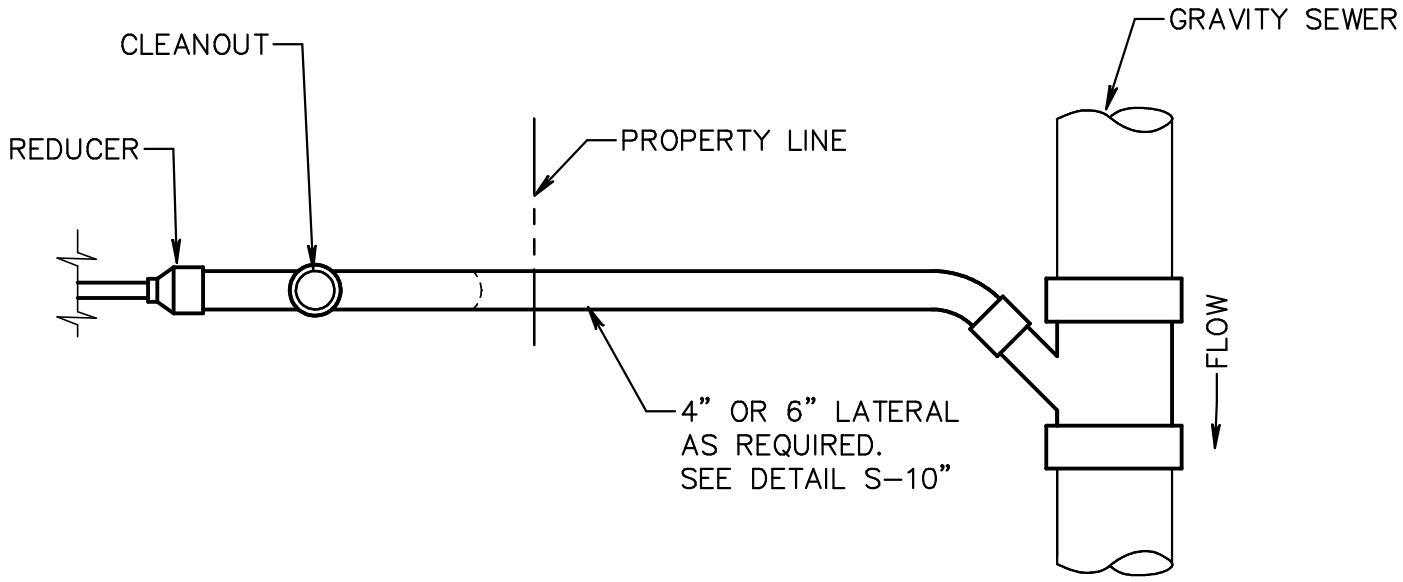

PLAN VIEW

NOTE:
PLACE CLEANOUT AT PROPERTY LINE
OR EDGE OF EASEMENT

DATE April 2013	Spotsylvania County Department of Utilities	LOW PRESSURE HOUSE SEWER CONNECTION TO GRAVITY SEWER	DRWG. NO. S20
REVISIONS			

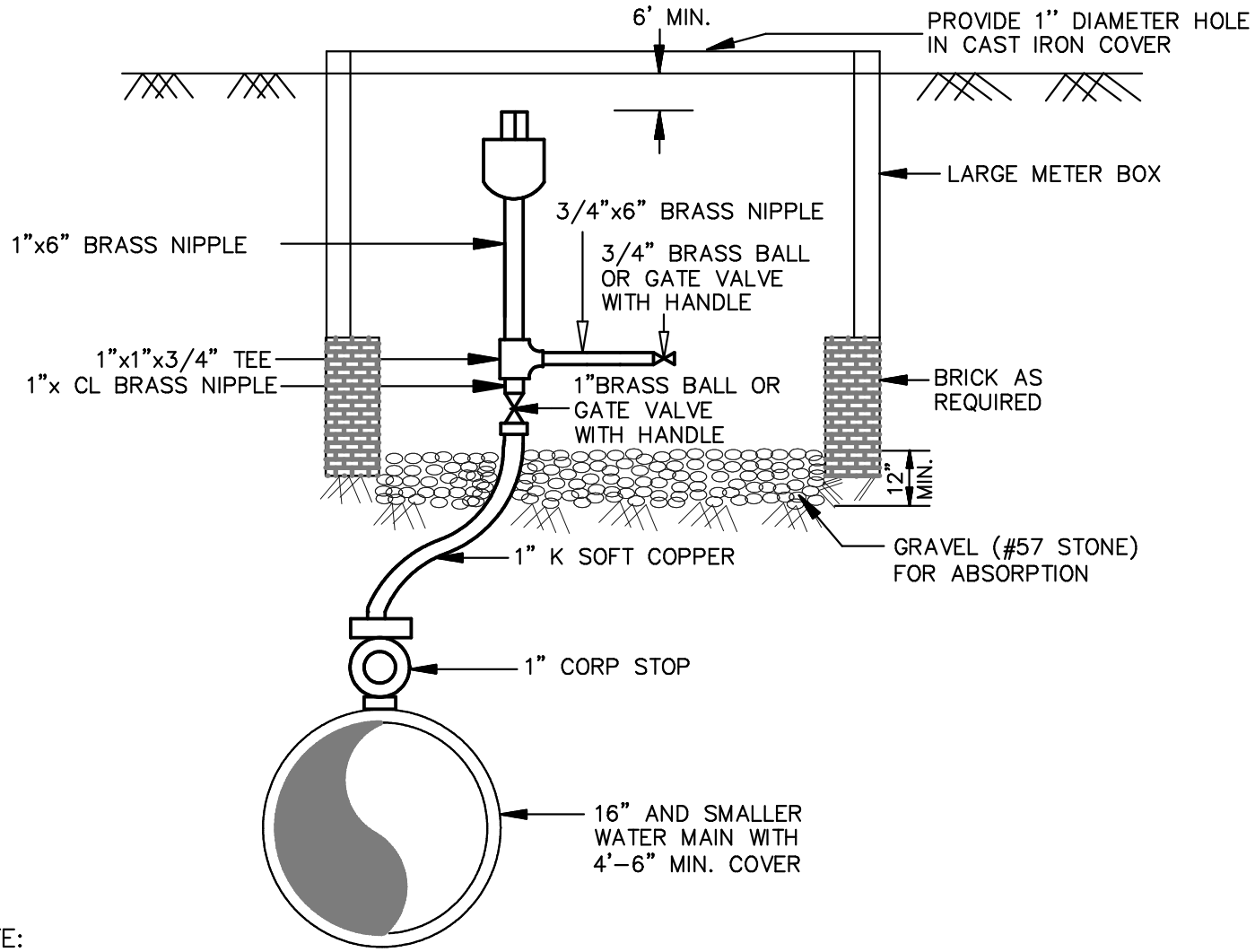

NOTE:

1. IT IS THE RESPONSIBILITY OF THE DESIGN ENGINEER TO DESIGN THE PUBLIC WATER SYSTEM TO MINIMIZE THE NUMBER OF AIR RELEASE VALVES BY ELIMINATING HIGH POINTS WHERE REASONABLY FEASIBLE AND TO PROPERLY SIZE THE AIR RELEASE VALVE TAKING INTO CONSIDERATION ALL THE DESIGN FACTORS.

2. ORIFICE SIZE SHALL BE NOTED ON PLANS.

3. ALL COPPER FITTINGS WILL BE FLARE OR COMPRESSION TYPE.

4. SADDLE MUST BE USED IF TAP IS MADE IN PVC.

5. WHERE THE AIR RELEASE VALVE IS REMOTE FROM THE WATER LINE THERE MUST BE CONTINUOUS RISE IN THE COPPER SUPPLY LINE TO THE AIR RELEASE VALVE AND NO TRAP SHALL BE PERMITTED.

6. AIR RELEASE VALVE TO BE PLACED WHERE NOT SUBJECT TO FLOODING.

Not to Scale

DATE April 2013	Spotsylvania County Department of Utilities	1" Water Air Release Valve	DRWG. NO.
REVISIONS			W1

NOTES:

(A) ON ROADWAYS WITHOUT CURB AND GUTTER, VALVE SHOULD BE IN SHOULDER OF ROAD OR BETWEEN PAVEMENT AND DITCH. MINIMUM COVER AT DITCH MUST BE 3'6" OR GREATER.

(B) ALL PIPE SHALL BE DI & RESTRAINED. PROVIDE THRUST BLOCK BEHIND EXISTING MAIN TEE IF EXISTING MAIN CANNOT BE RESTRAINED USING RESTRAINED JOINT PIPE.

(C) IF NO HEIGHT ADJUSTMENT IS NEEDED, THE CONNECTOR PIPE MAY BE STRAIGHT PIPE. OTHERWISE, THE CONNECTOR PIPE SHALL BE OF THE OFFSET DESIGN SO THAT THE FIRE HYDRANT CAN BE ADJUSTED TO ENSURE PLACEMENT AT THE PROPER GRADE.

(D) THE CONNECTOR PIPE SHALL BE CEMENT LINED IN ACCORDANCE WITH AWWA C110–ANSI 214.

(E) THE CONNECTOR PIPE SHALL BE DUCTILE IRON AWWA C153–ANSO A21.53 AND POSITIONED BETWEEN THE FIRE HYDRANT AND GATE VALVE.

(F) HYDRANT BREAKAWAY FLANGE SHOULD BE LOCATED NO MORE THAN 6" ABOVE FINISHED GRADE AND NOT BELOW FINISHED GRADE.

(G) 24" DIA. X 6" DEEP COLLAR AROUND VALVE BOX. PAINT, REFLECTOR BAND, REMOVE SAFETY CHAINS, GREASE NOZZLES WITH "AWWA" APPROVED MATERIAL.

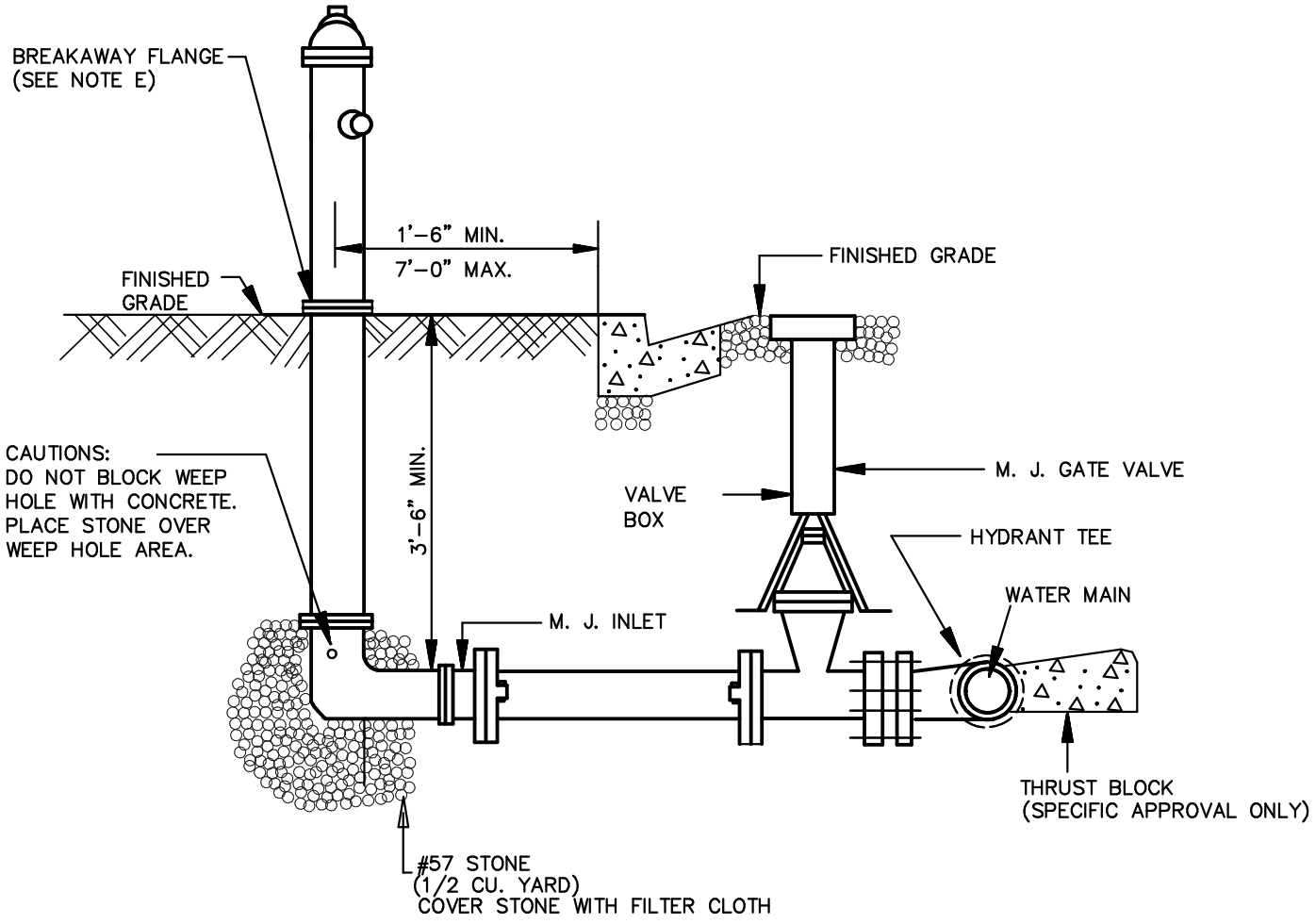

Not to Scale

DATE April 2013	Spotsylvania County Department of Utilities	Fire Hydrant	DRWG. NO.
REVISIONS			W2

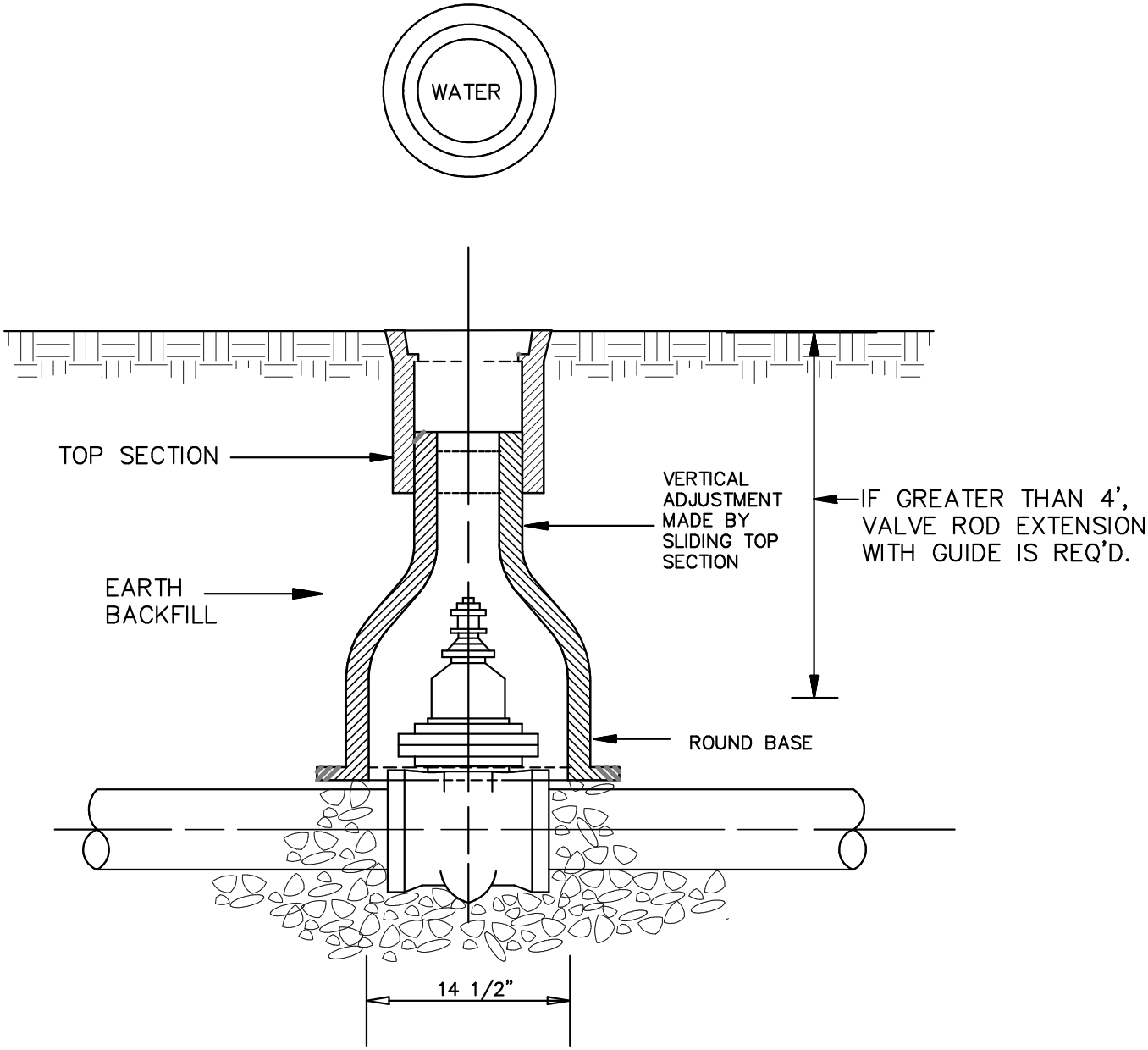

USE TWO PIECE CAST IRON VALVE BOX OF THE APPROPRIATE LENGTH (HEIGHT)

Not to Scale

DATE April 2013	Spotsylvania County Department of Utilities	Valve Box	DRWG. NO.
REVISIONS			W3

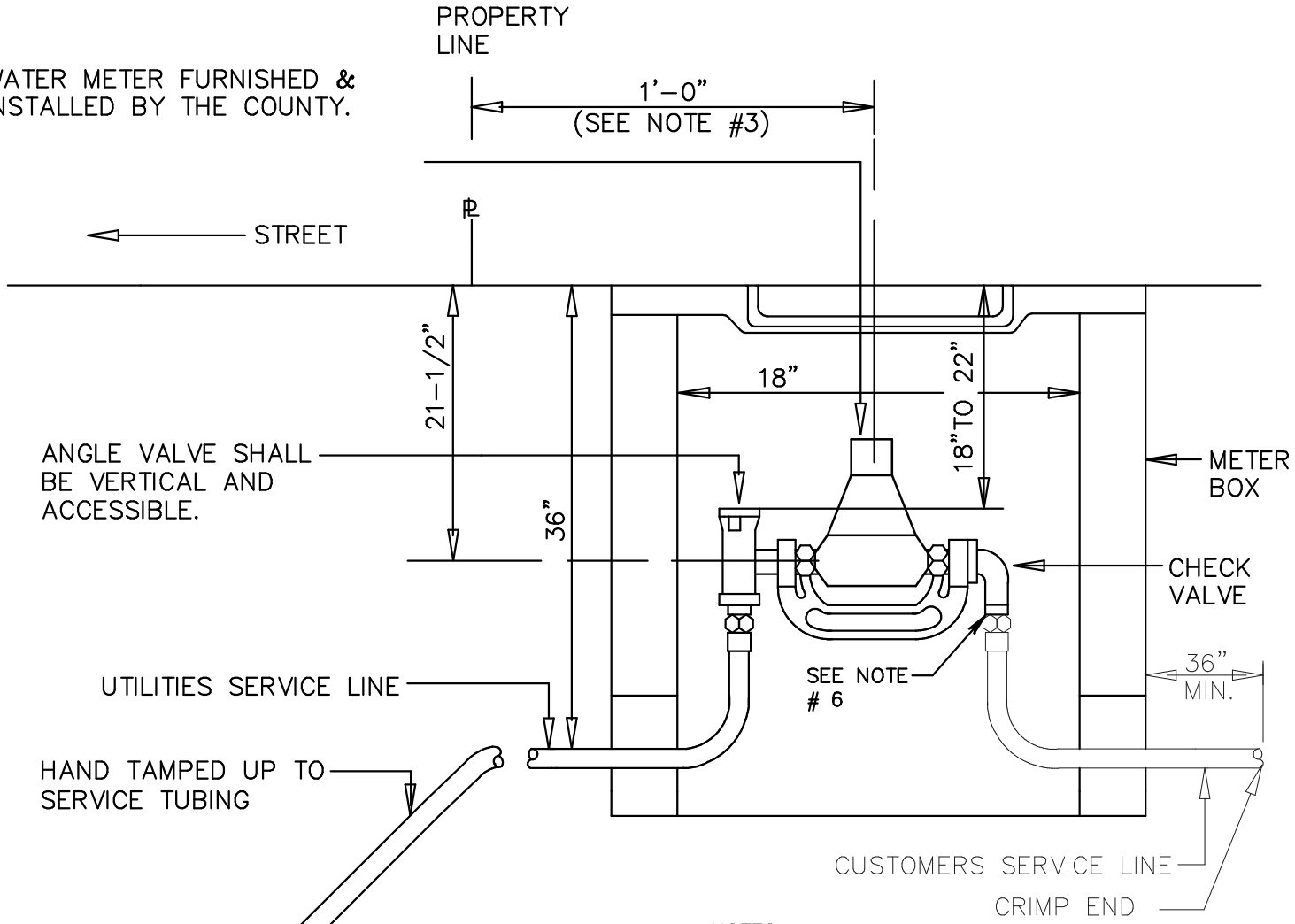

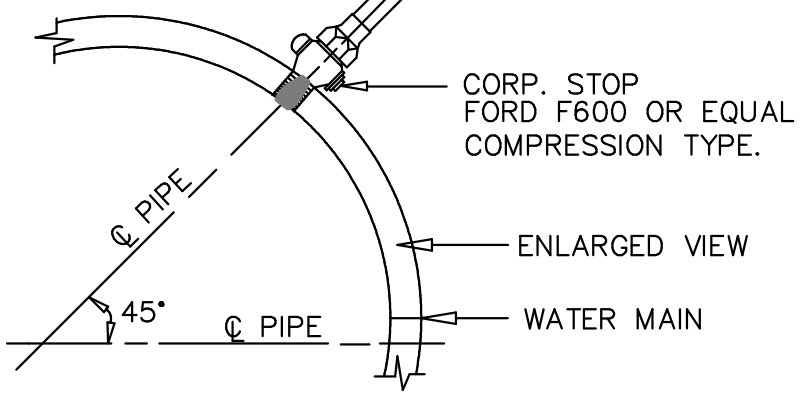

SADDLE MUST BE USED IF TAP IS MADE IN PVC OR A/C PIPE.

NOTES:

1. METER SETTER SHALL BE CENTERED IN METER BOX AND COPPER TUBING ON OUTLET SIDE OF SETTER SHALL EXTEND 18" OUTSIDE OF BOX ON CUSTOMER'S SIDE. THIS COPPER TUBING SHALL BE CRIMPED ON THE END TO KEEP DIRT FROM ENTERING LINE.
2. COPPER TUBING TO THE CORPORATION STOP MUST BE COMPRESSION.
3. METER BOX SHOULD BE LOCATED 1' INSIDE OF PROPERTY LINE. METER BOX MAY BE MOVED A REASONABLE DISTANCE INSIDE PROPERTY LINE IN ORDER TO INSTALL ON REASONABLY LEVEL GROUND.
4. SERVICES SHALL BE INSTALLED PRIOR TO TESTING.
5. BYPASS SHALL NOT BE ALLOWED FOR 1" RESIDENTIAL AND IRRIGATION METERS.
6. CUSTOMER LINE TO BE INSTALLED AT TIME OF BUILDING CONSTRUCTION.

Not to Scale

DATE April 2013	Spotsylvania County Department of Utilities	Water Meter Setting 5/8" to 1"	DRWG. NO.
REVISIONS			W4

NOTES:

1. DI TAPPING SLEEVE FOR ALL 1 1/2" AND 2" TAPS.
2. WATER SERVICE LATERALS FOR 1 1/2" AND 2" SERVICES WILL BE TYPE-K HARD COPPER. CONNECTIONS FOR 1 1/2" AND 2" SERVICES APPROVED COMPRESSION FITTINGS.
3. TAPS SHOULD BE MADE AT THE SPRING LINE OF THE MAIN LINE.
4. VAULT : ONE PIECE BARREL, 36" DIAMETER HIGH DENSITY POLYETHYLENE
5. CUSTOM SETTER MUST BE INSTALLED WITH A METER SPACER THAT WILL BE FURNISHED TO THE CONTRACTOR BY THE UTILITIES DEPARTMENT INSPECTOR. THE SPACER WILL BE REMOVED BY THE UTILITIES DEPARTMENT WHEN THE METER IS SET. OPTION TO OBTAIN METER FROM UTILITIES AT TIME OF INSTALLATION.

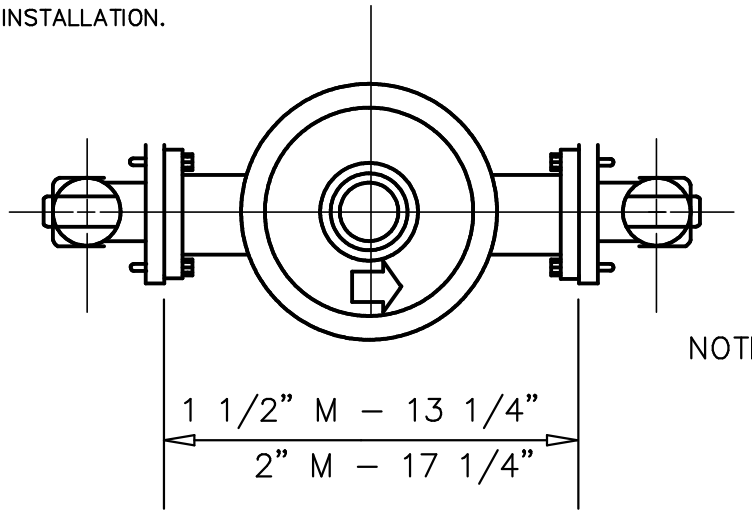

NOTE: BYPASS SHALL BE LOCATED ABOVE OR AT FLOOR LEVEL OF METER BARREL.

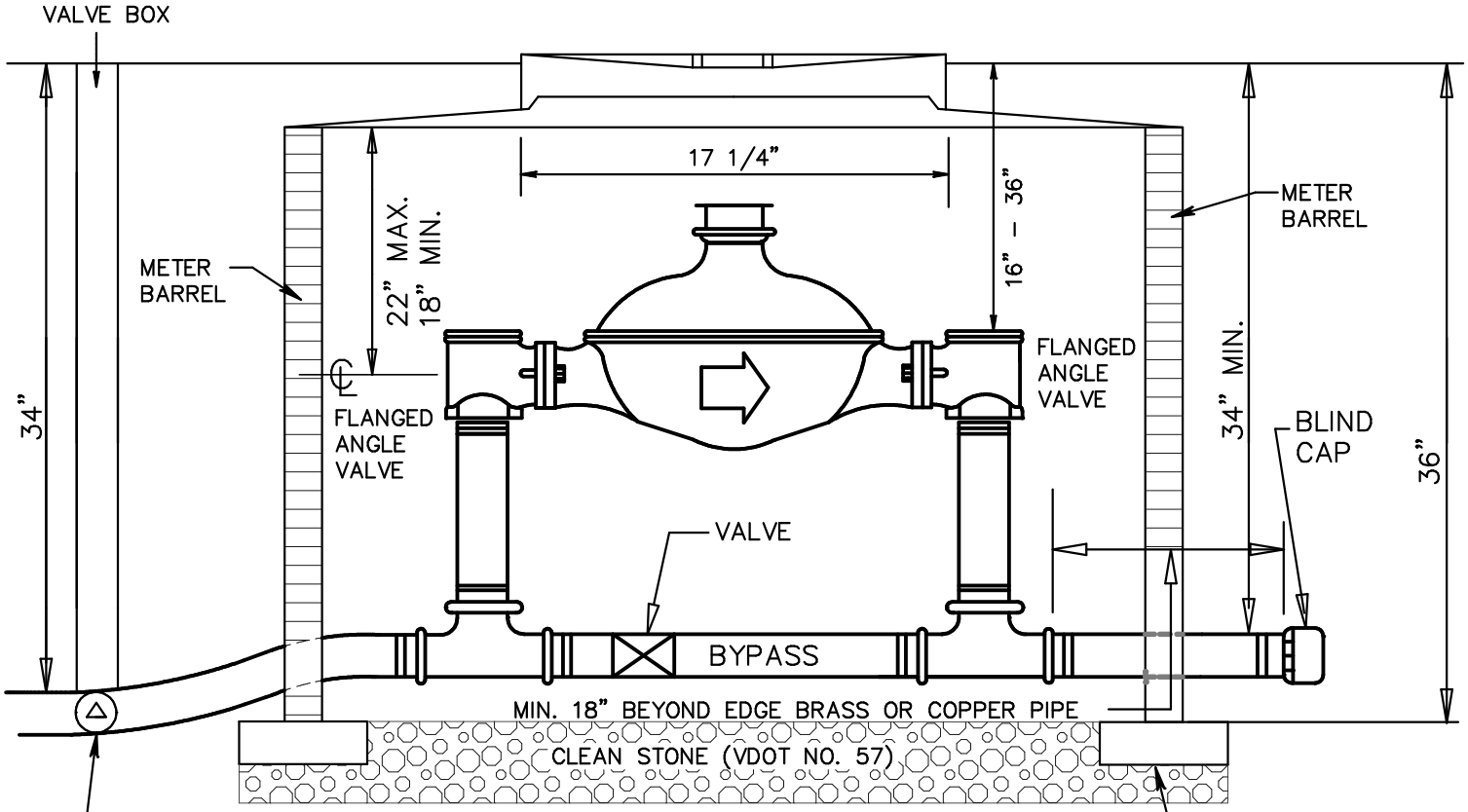

4" GATE VALE w/REDUCER MUST BE LOCATED WITHIN 1 FOOT FROM EDGE OF METER BOX.

Not to Scale

DATE April 2013	Spotsylvania County Department of Utilities	Water Meter Setting 1–1/2" to 2"	DRWG. NO. W5
REVISIONS			

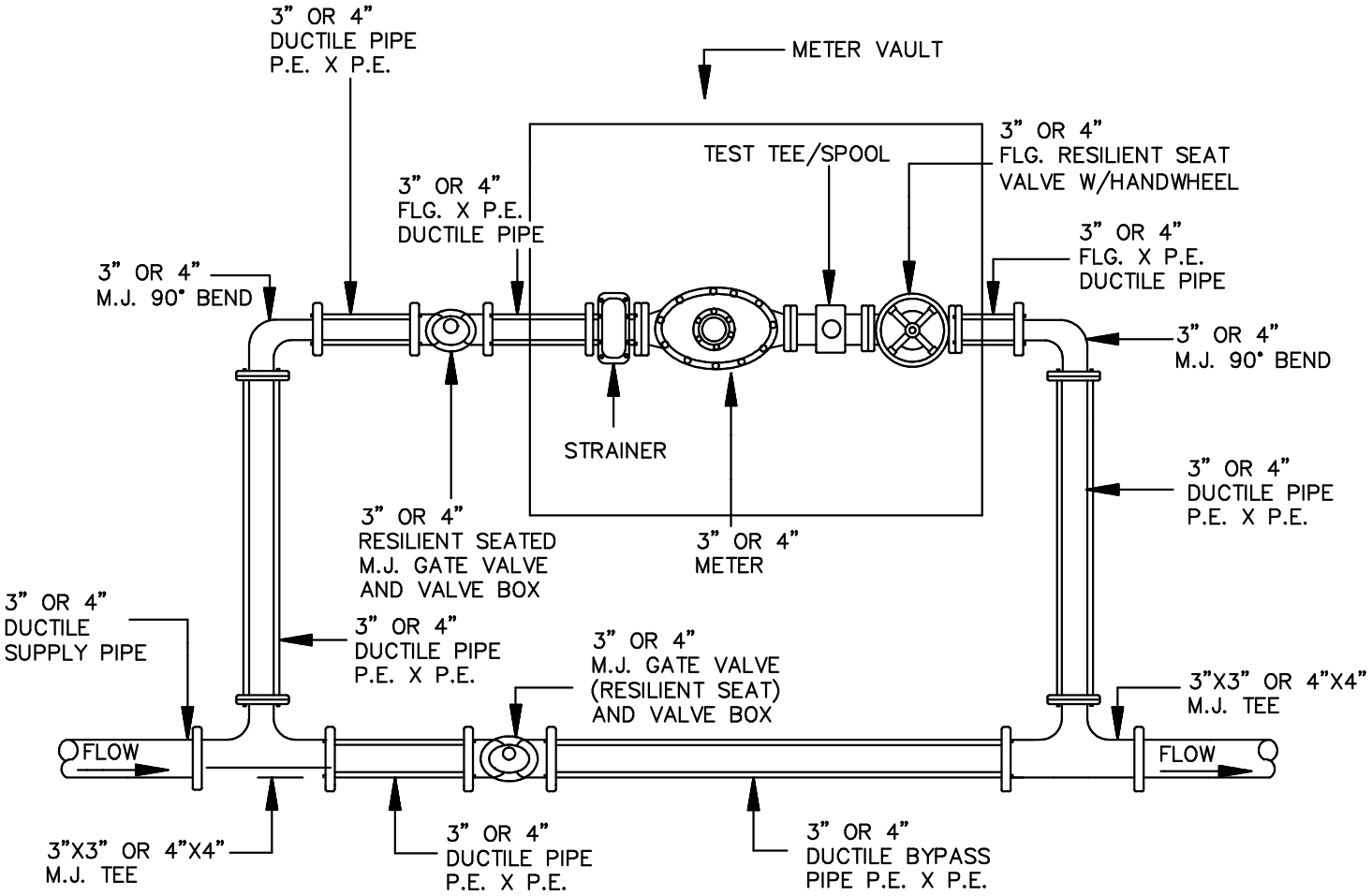

PLAN VIEW

NOTES:

1. THE CONTRACTOR SHALL NOT INSTALL THE PIPING UNTIL THE METER AND ASSOCIATED APPURTENANCES HAVE BEEN PURCHASED FROM THE UTILITIES DEPARTMENT AND ARE ON THE PROJECT, SO THAT THE CORRECT LENGTH OF PIPE IS INSTALLED ACCORDING TO THIS DETAILED CONFIGURATION. STRAINER, METER AND TEST TEE OR SPOOL PROVIDED BY COUNTY.

2. 3" OR 4" APPROVED JOINT RESTRAINT DEVICES ARE REQUIRED ON ALL MECHANICAL JOINT (M.J.) CONNECTIONS. ALL FITTINGS SHALL BE MECHANICAL JOINT.

3. FOR DETAILS OF VAULT, SEE W9.

4. NO CHECK VALVE OR PRV IS ALLOWED ON THE INLET SIDE OF THE METER.

5. CONTRACTOR IS REQUIRED TO COORDINATE WITH THE UTILITY DEPARTMENT OPERATION CENTER, THE PURCHASE AND PICK UP OF A COUNTY APPROVED METER. ALL CONNECTION FEES AND/OR OTHER APPLICABLE CHARGES OR FEES MUST BE PAID TO PICK UP THE WATER METER, TEST TEE AND STRAINER FROM THE UTILITIES DEPARTMENT.

Not to Scale

DATE April 2013 REVISIONS	Spotsylvania County Department of Utilities	Water Meter Setting Over 2 Inches	DRWG. NO. W6

NOTE: PROVIDE 1-3/4" DIA. HOLE IN METER BOX LID FOR INSTALLATION OF COUNTY'S METER READING SYSTEM

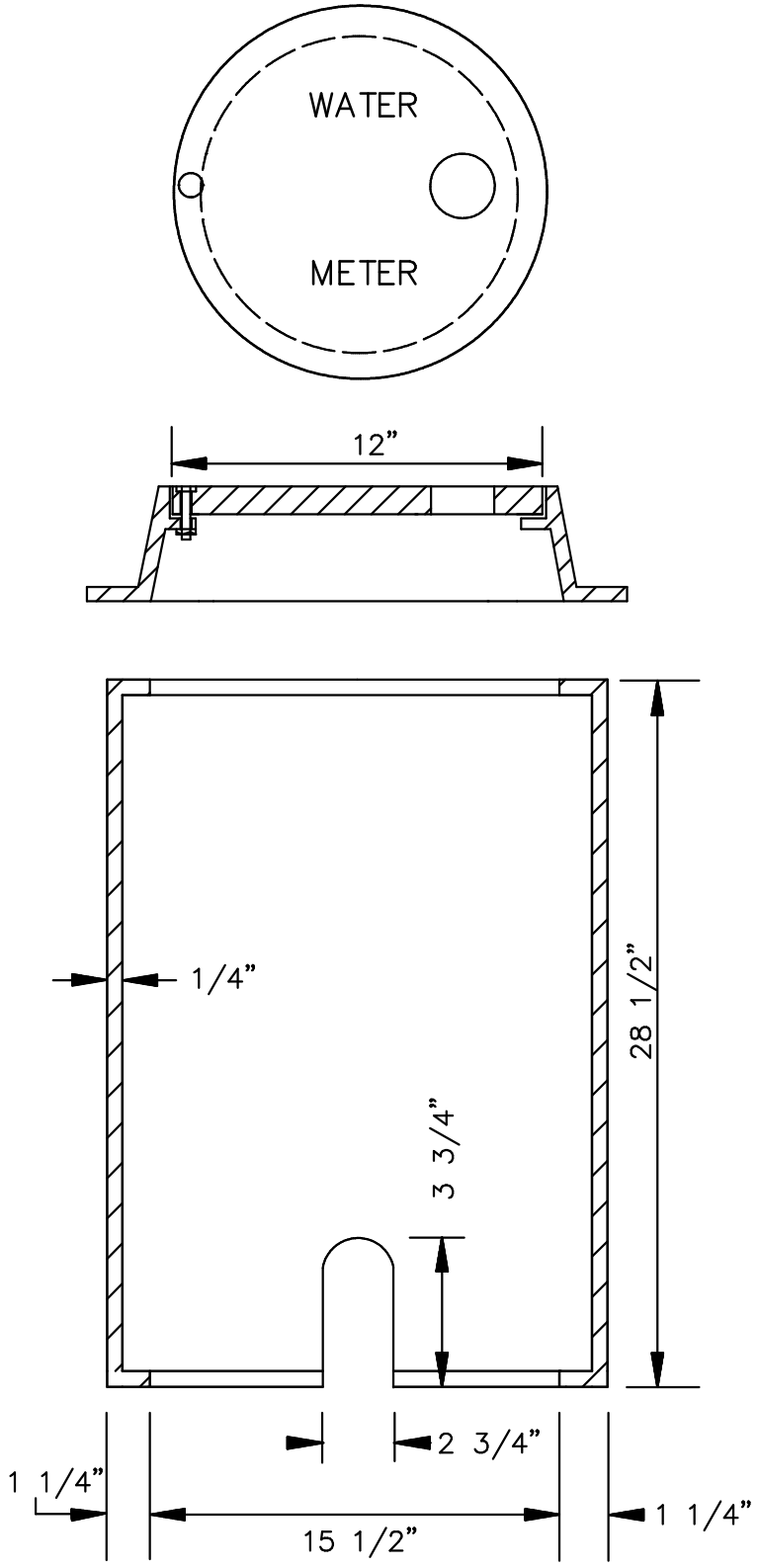

Not to Scale

DATE April 2013	Spotsylvania County Department of Utilities	Meter Box 5/8" to 1"	DRWG. NO. W7
REVISIONS			

NOTE: PROVIDE 1–3/4" DIA. HOLE IN METER BOX LID FOR INSTALLATION OF COUNTY'S METER READING SYSTEM

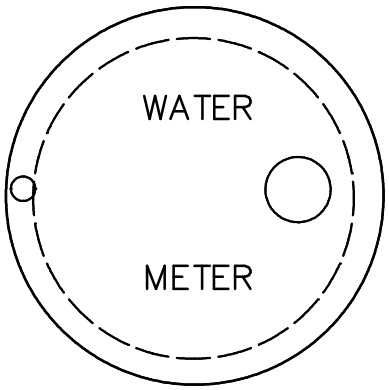

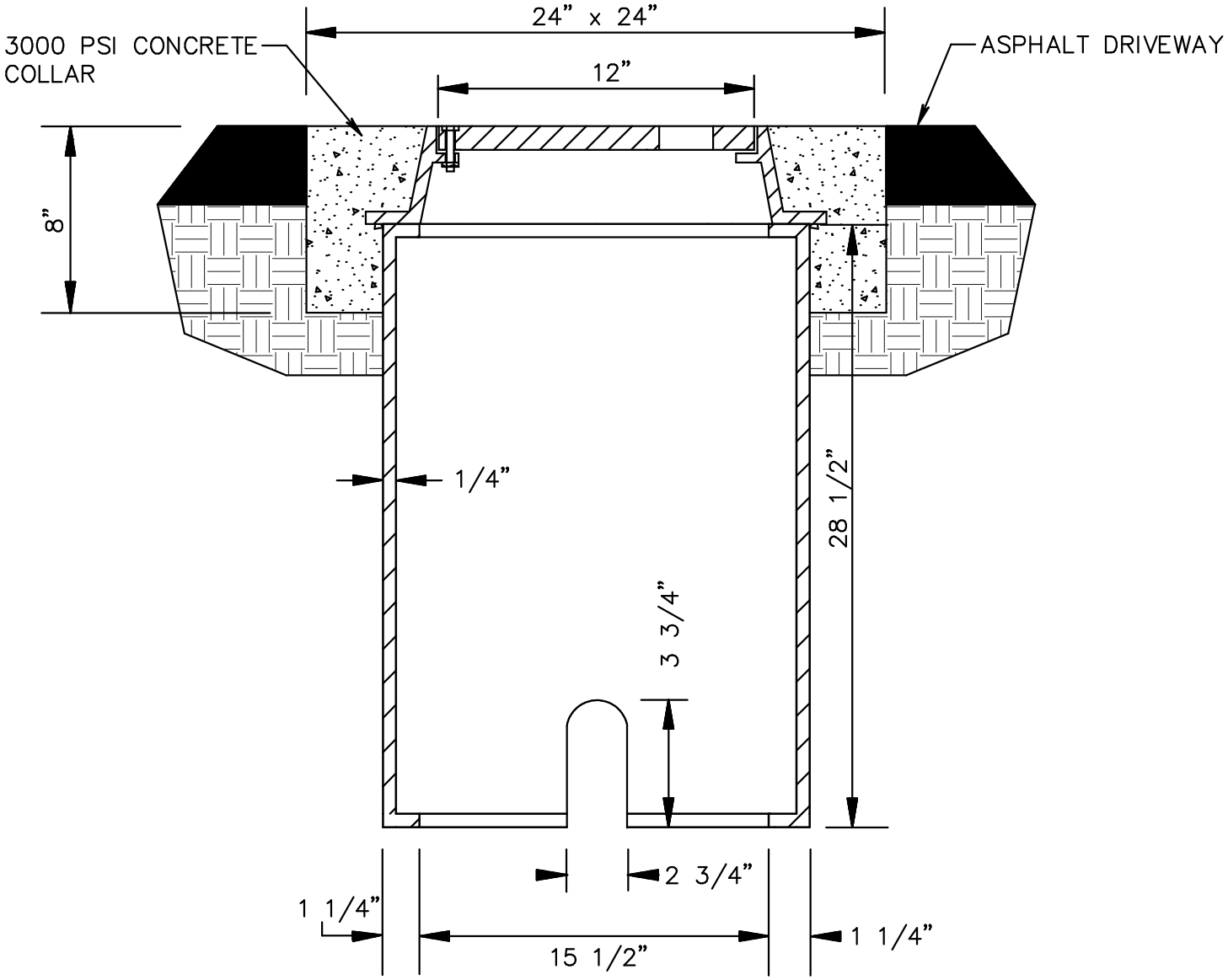

Not to Scale

DATE April 2013	Spotsylvania County Department of Utilities	Meter Box 5/8" to 1"	DRWG. NO.
REVISIONS			W7–A

NOTE: PROVIDE 1-3/4" DIA. HOLE IN METER BOX LID FOR INSTALLATION OF COUNTY'S METER READING SYSTEM

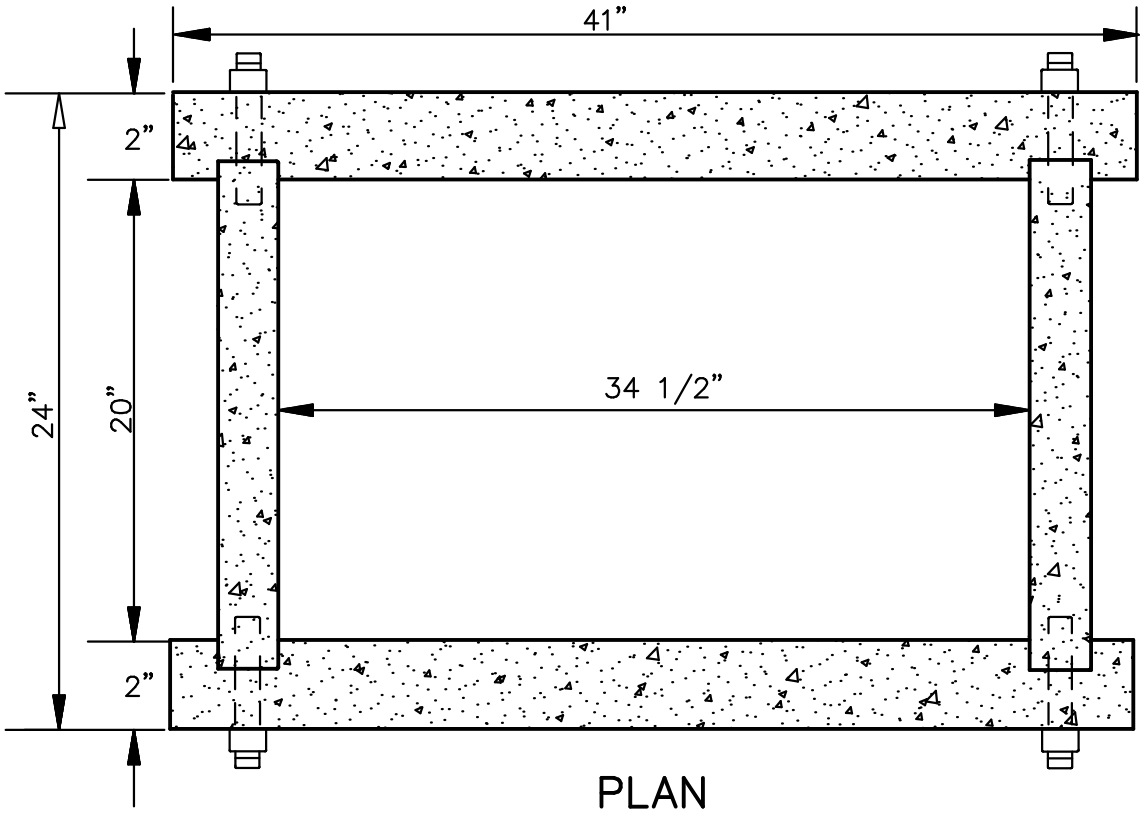

PLAN

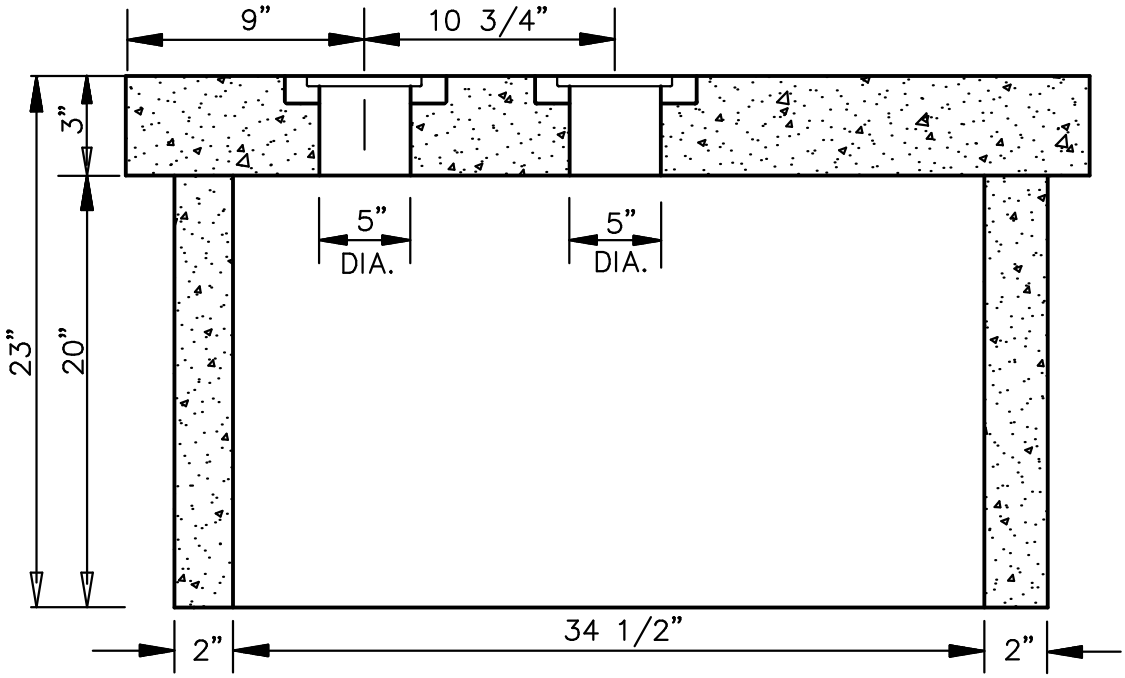

ELEVATION

Not to Scale

DATE April 2013	Spotsylvania County Department of Utilities	Water Meter Box 1-1/2" to 2"	DRWG. NO.
REVISIONS			W8

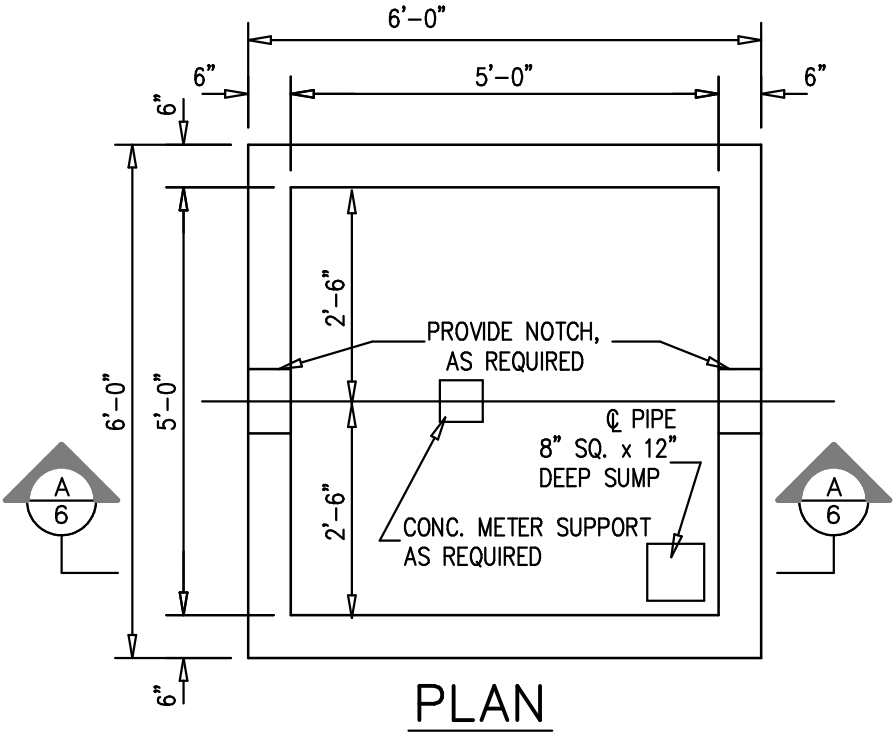

PLAN

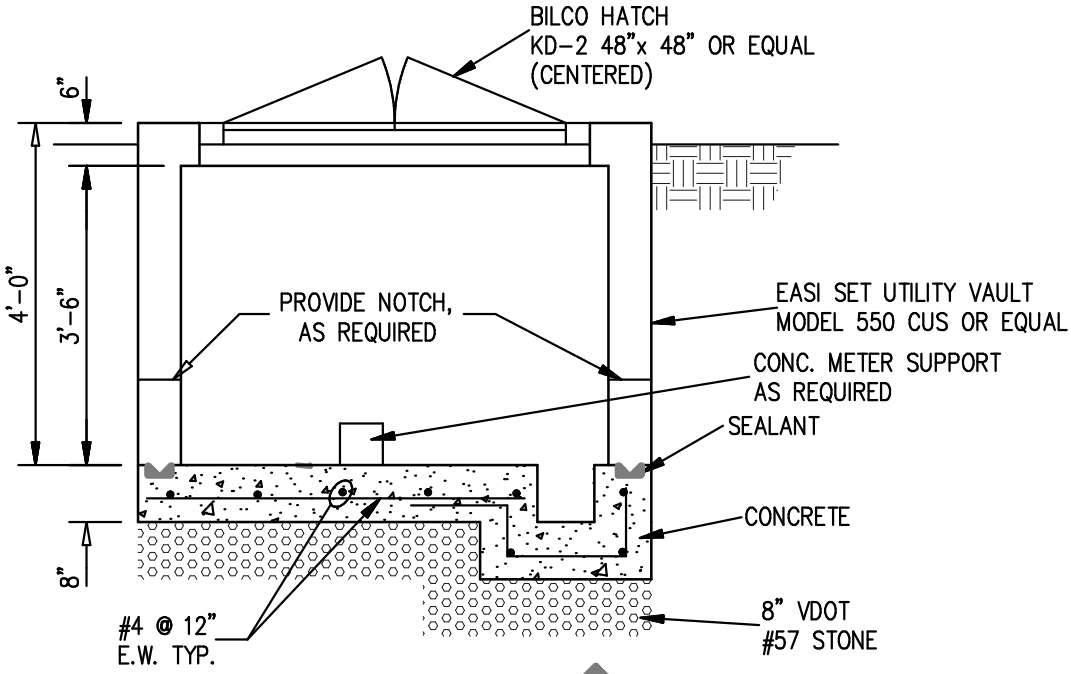

SECTION A/6

NOTE: PROVIDE 1-3/4" DIA. HOLE IN METER BOX LID FOR INSTALLATION OF COUNTY'S METER READING SYSTEM

Not to Scale

DATE April 2013	Spotsylvania County Department of Utilities	Water Meter Box Over 2 Inches	DRWG. NO.
REVISIONS			W9

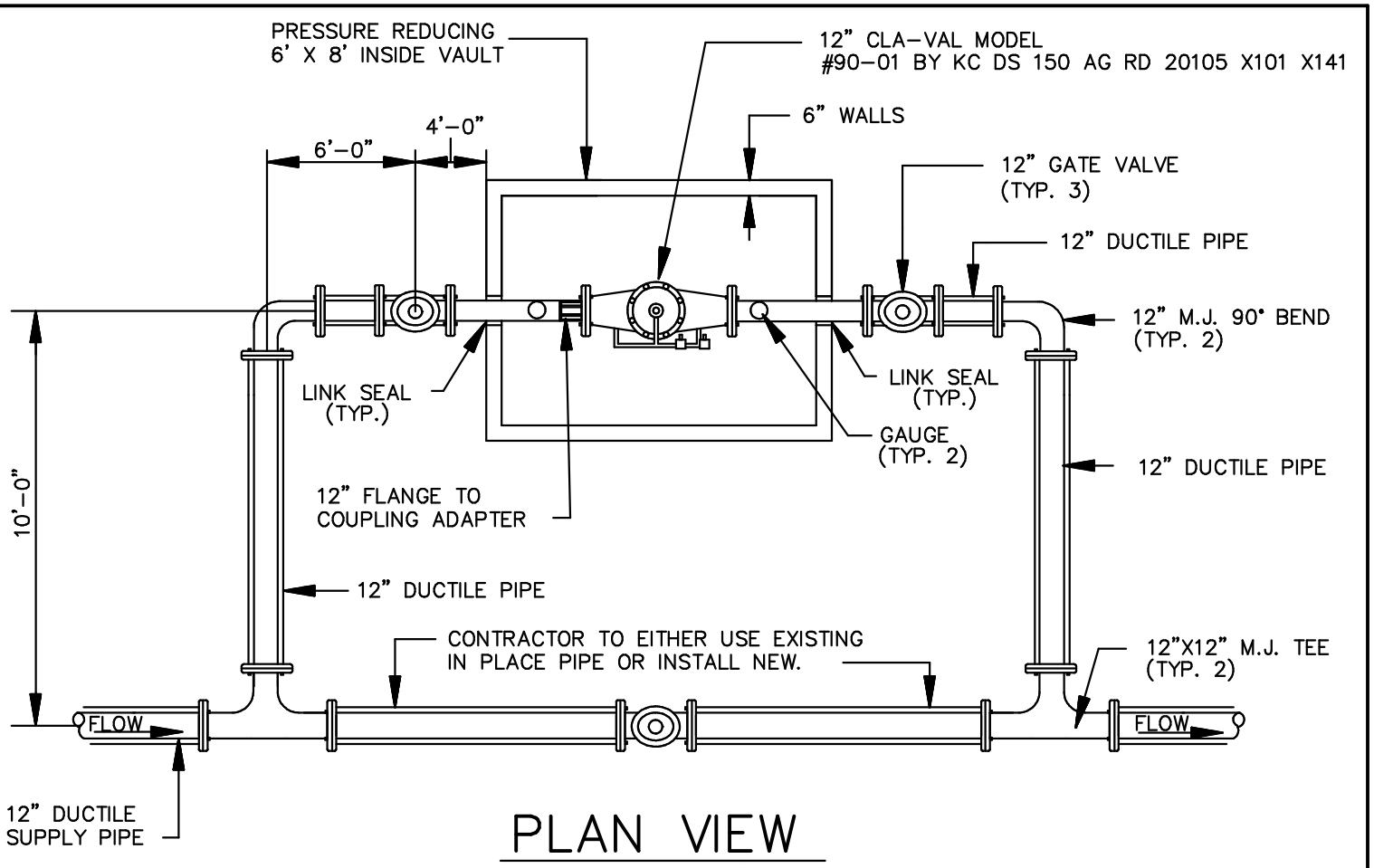

PLAN VIEW

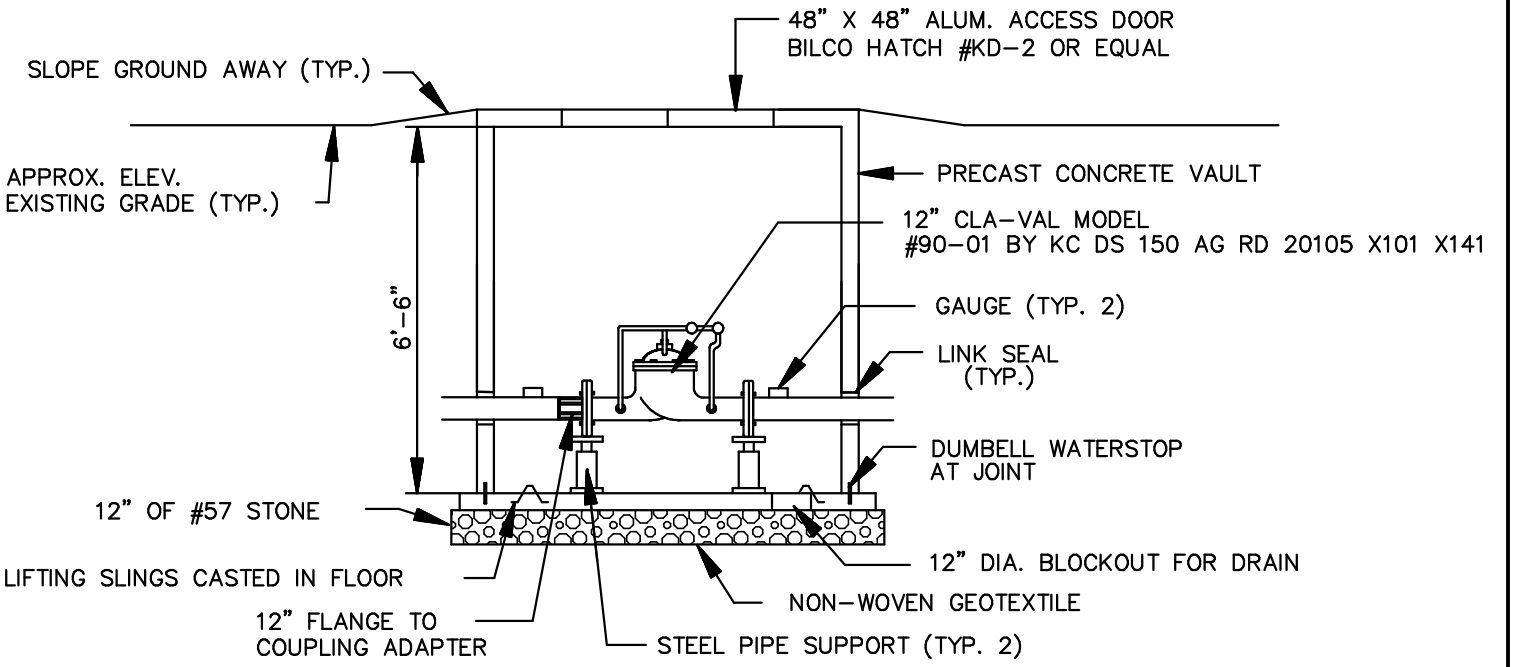

PROFILE VIEW

Not to Scale

DATE April 2013	Spotsylvania County Department of Utilities	PRESSURE REDUCING VALVE VAULT	DRWG. NO.
REVISIONS			W10